Parts Manual

Mfg. No: 09P602-0076-F1

Copyright © Briggs and Stratton. All Rights reserved

08-Apr-2020

Model Components

Page

Air Cleaner, Cylinder Head, Gasket Set. 4
Armature, Controls, Electrical System, Governor Spring, Ignition, Spark Plug. 6
Blower Housing, Rewind Starter. 8
Camshaft, Crankshaft, Cylinder, Piston/Rings/Connecting Rod, Sump, Warning Label. 10
Carburetor. 14
Exhaust System, Fuel Supply. 16
Flywheel. 18
Replacement Engine - US & Canada. 20

Not For
InReproduction

Copyright © Briggs and Stratton. All Rights reserved

Air Cleaner, Cylinder Head, Gasket Set

Mfg. No: 09P602-0076-F1

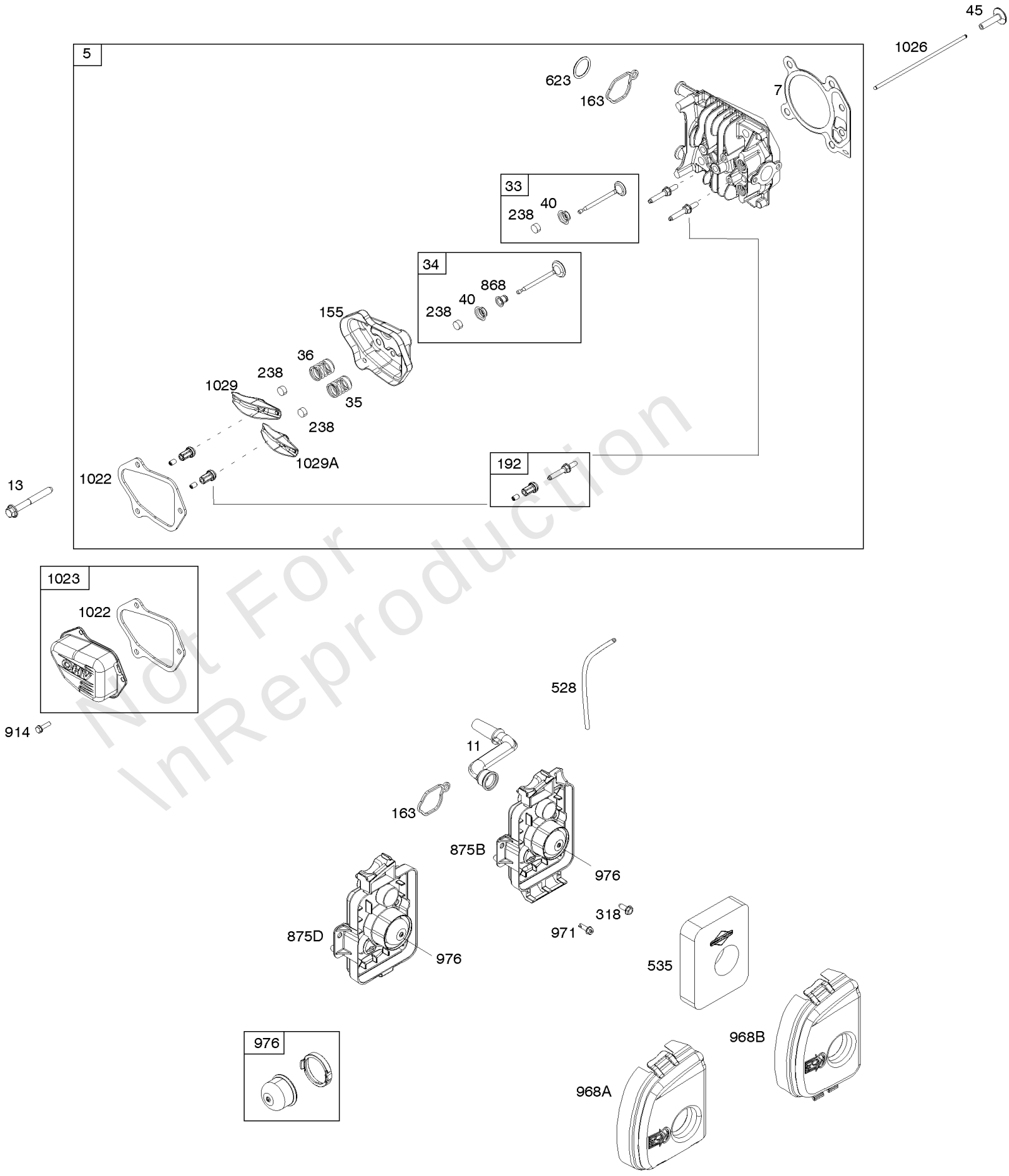

Not For InRepro duction

Air Cleaner, Cylinder Head, Gasket Set

REF NO	PART NO	QTY	DESCRIPTION
5	595351		HEAD, Cylinder -Used Before Code Date 18070100
5	84001270		HEAD, Cylinder -Used After Code Date 18063000
7	799586		GASKET, Cylinder Head
11	590522		TUBE, Breather
13	590512		SCREW -(Cylinder Head)
33	590531		VALVE, Exhaust
34	590530		VALVE, Intake -Used Before Code Date 18070100
34	84001987		VALVE, Intake -Used After Code Date 18063000
35	590532		SPRING, Valve -(Intake)
36	590532		SPRING, Valve -(Exhaust)
40	590528		RETAINER, Valve
45	590514		TAPPET, Valve
155	590529		PLATE, Cylinder Head
163	799580		GASKET, Air Cleaner -(Air Cleaner)
192	590535		ADJUSTER. Rocker Arm
238	590533		CAP, Valve
318	793480		SCREW -(Mounting Bracket)
528	793006		HOSE, Primer -(Cut To Required Length)
535	799579		FILTER, Air Cleaner Foam
623	799581		SEAL, O-Ring -(Carburetor Spacer)
868	590534		SEAL, Valve -Used Before Code Date 18070100
868	84001271		SEAL, Valve -Used After Code Date 18063000
875B	590584		BASE, Air Cleaner -Used Before Code Date 16071100
875B	595663		BASE, Air Cleaner -Used After Code Date 16071000
914	591103		SCREW -(Rocker Cover)
968B	595660		COVER, Air Cleaner
971	590552		SCREW -(Air Cleaner Base to Carburetor/Throttle Body)
976	594281		PRIMER, Carburetor
1022	591255		GASKET, Rocker Cover
1023	595349		COVER, Rocker
1026	590515		ROD, Push
1029	590526		ARM, Rocker
1029A	590527		ARM, Rocker

Not For Reproduction

Copyright © Briggs and Stratton. All Rights reserved

Armature, Controls, Electrical System, Governor Spring, Ignition, Spark Plug

Mfg. No: 09P602-0076-F1

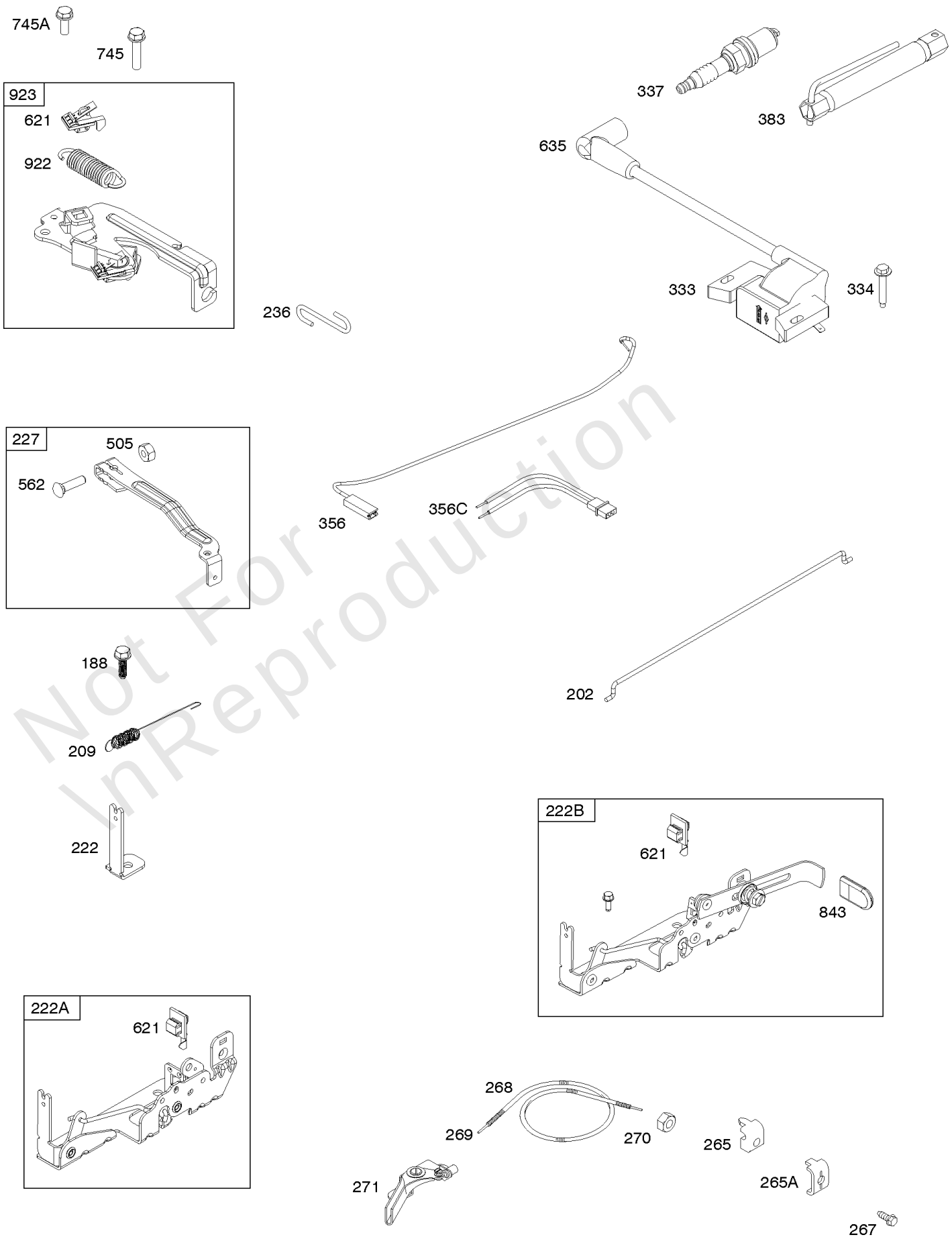

Not For Reproduction

Armature, Controls, Electrical System, Governor Spring, Ignition, Spark Plug

REF NO	PART NO	QTY	DESCRIPTION
188	793480		SCREW -(Control Bracket)
202	590517		LINK, Mechanical Governor
209	596459		SPRING, Governor
222	590560		BRACKET, Control
222A	596458		BRACKET, Control -Used After Code Date 17010100
222A	590561		BRACKET, Control -Used Before Code Date 17010200
222B	596465		BRACKET, Control
227	590520		LEVER, Governor Control
236	591292		LINK, Lockout
265	690798		CLAMP, Casing
265A	691024		CLAMP, Casing
267	692577		SCREW -(Casing Clamp)
268	691025		CASING, Control Wire -(Cut To Required Length)
269	691026		WIRE, Control -(Cut To Required Length)
270	691027		NUT -(Control Wire Casing)
271	691028		LEVER, Control
333	593872		ARMATURE, Magneto
334	691061		SCREW -(Magneto Armature)
337	692051		PLUG, Spark -(Resistor)
356	692390		WIRE, Stop
356C	796798		WIRE, Stop
383	19576S		WRENCH, Spark Plug
505	793515		NUT -(Governor Control Lever)
562	793514		BOLT -(Governor Lever)
621	692310		SWITCH, Stop
635	692076		BOOT, Spark Plug
745	691146		SCREW -(Brake)
745A	690859		SCREW -(Brake)
843	593215		SLEEVE, Lever
922	692135		SPRING, Brake
923	691487		BRAKE

Not For Reproduction

Copyright © Briggs and Stratton. All Rights reserved

Blower Housing, Rewind Starter

Mfg. No: 09P602-0076-F1

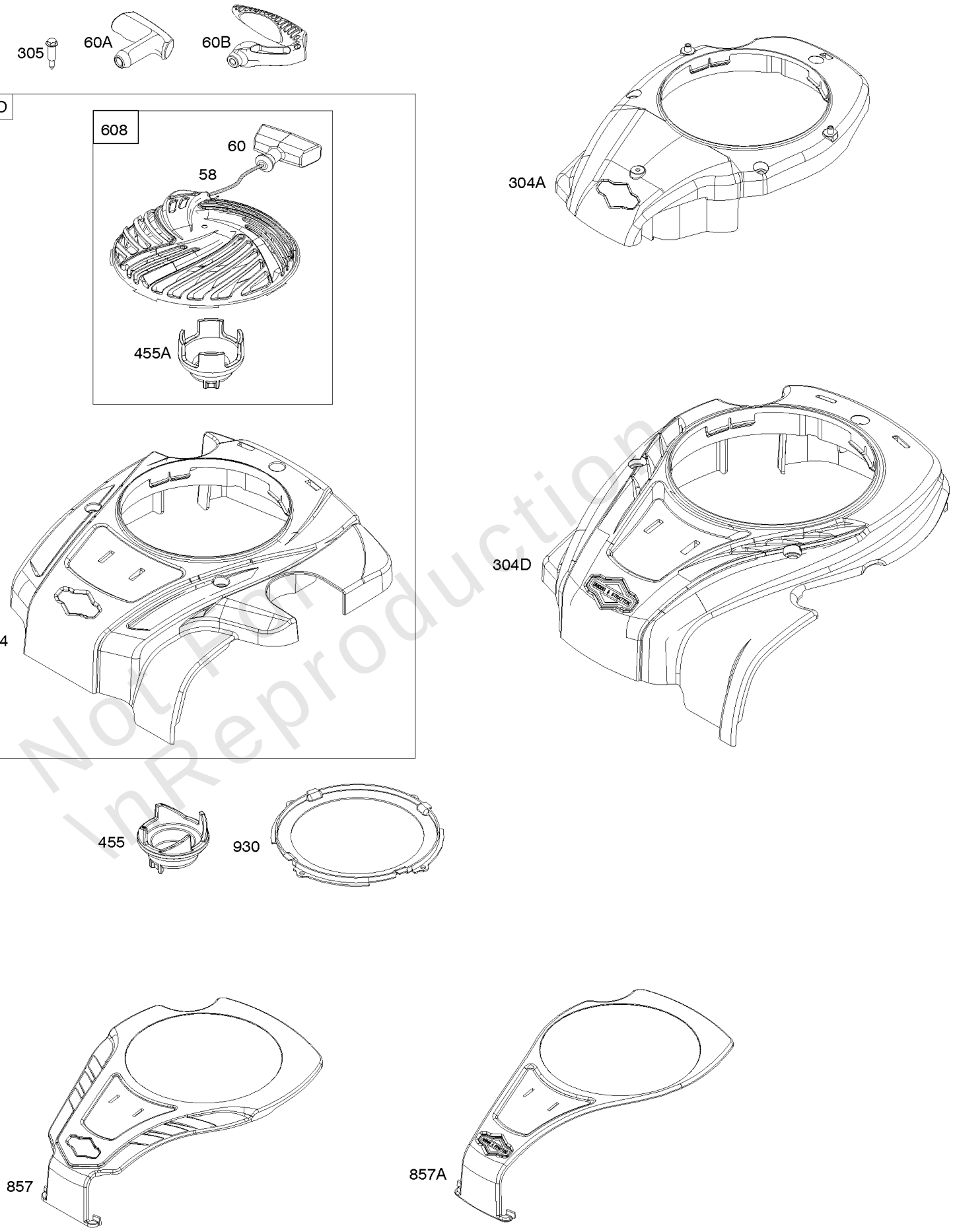

Not For Reproduction

Blower Housing, Rewind Starter

REF NO	PART NO	QTY	DESCRIPTION
58	591108		ROPE, Starter
60	691915		GRIP, Starter Rope
60A	281434S		GRIP, Starter Rope
60B	799716		GRIP, Starter Rope
304	593961		HOUSING, Blower
304A	593962		HOUSING, Blower
304D	596457		HOUSING, Blower
305	590586		SCREW -(Blower Housing)
455	590545		CUP, Flywheel -Used Before Code Date 14082500
455A	593960		CUP, Flywheel -(To Be Used With Reference 608) -Used After Code Date 14082400
608	593959		STARTER, Rewind -(To Be Used With Reference 455A) (Not To Be Used With Reference 455) -Used After Code Date 14082400
770D	595355		KIT, Rewind/Blower Housing
857	591113		TRIM, Blower Housing Cover
930	590585		GUARD, Rewind -Used Before Code Date 15041300

Not For Reproduction

Copyright © Briggs and Stratton. All Rights reserved

Camshaft, Crankshaft, Cylinder, Piston/Rings/Connecting Rod, Sump, Warning Label

Mfg. No: 09P602-0076-F1

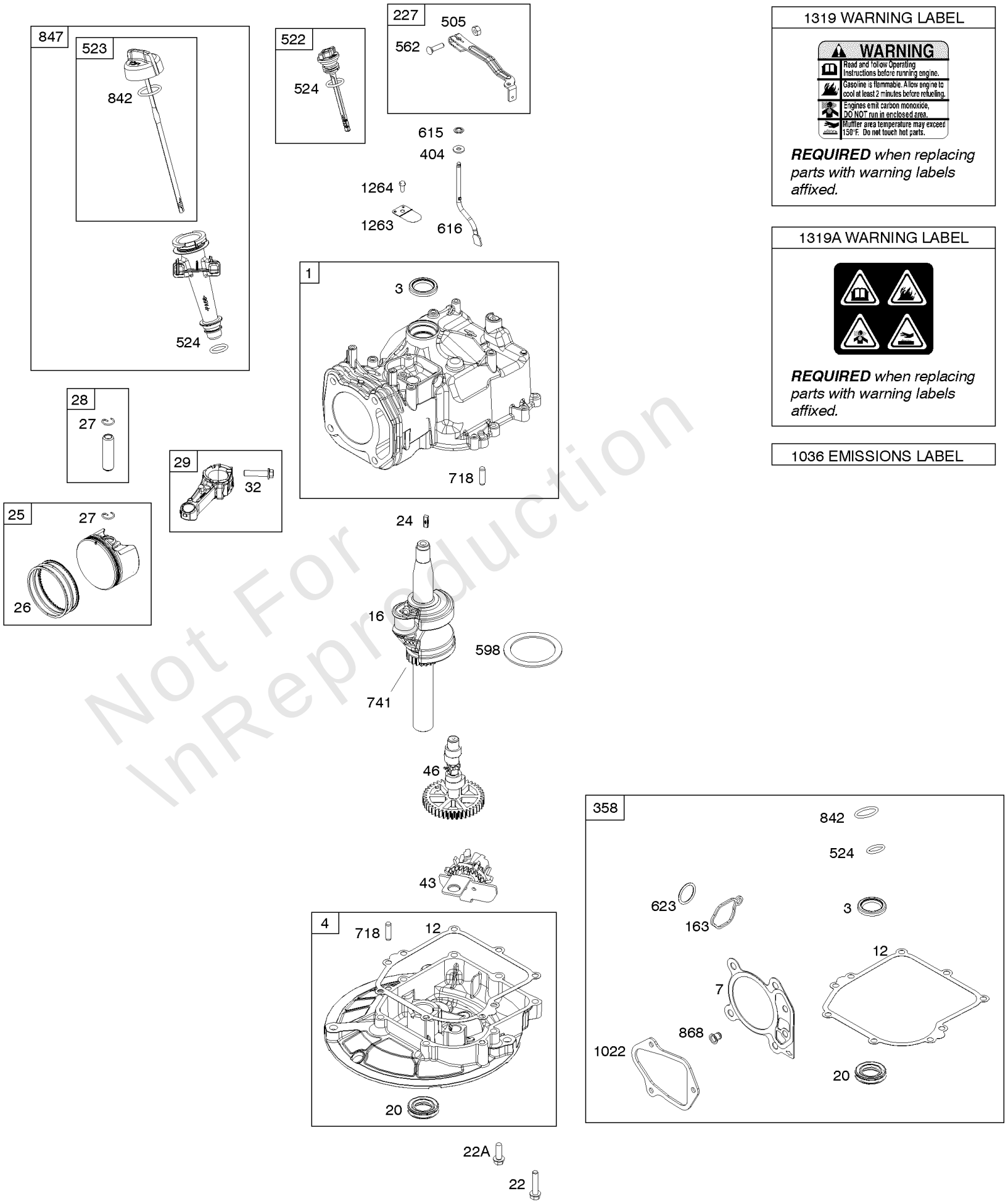

1319 WARNING LABEL

***REQUIRED** when replacing parts with warning labels affixed.*

1319A WARNING LABEL

***REQUIRED** when replacing parts with warning labels affixed.*

1036 EMISSIONS LABEL

Not For Reproduction

Copyright © Briggs and Stratton. All Rights reserved

Camshaft, Crankshaft, Cylinder, Piston/Rings/Connecting Rod, Sump, Warning Label

REF NO	PART NO	QTY	DESCRIPTION
1	590519		CYLINDER ASSEMBLY
3	299819S		SEAL, Oil -(Magneto Side)
4	590569		SUMP, Engine
7	799586		GASKET, Cylinder Head
12	799587		GASKET, Crankcase
16	590538		CRANKSHAFT
20	391483S		SEAL, Oil -(PTO Side)
22	692551		SCREW -(Crankcase Cover/Sump)
22A	590763		SCREW -(Crankcase Cover/Sump)
24	222698S		KEY, Flywheel
25	590521		PISTON ASSEMBLY -(Standard)
26	590523		SET, Ring -(Standard)
27	691588		LOCK, Piston Pin
28	699659		PIN, Piston -(Standard)
29	590518		ROD, Connecting
32	691664		SCREW -(Connecting Rod)
43	697799		SLINGER, Governor/Oil
46	592968		CAMSHAFT
163	799580		GASKET, Air Cleaner -(Air Cleaner)
227	590520		LEVER, Governor Control
358	595350		GASKET SET, Engine -(Service Kits may include extra parts not specific to this engine.) -Used Before Code Date 18070100
358	84001272		GASKET SET, Engine -(Service Kits may include extra parts not specific to this engine.) -Used After Code Date 18063000
404	690272		WASHER -(Governor Crank)
505	793515		NUT -(Governor Control Lever)
522	590580		PLUG, Dipstick/Fill
523	796503		DIPSTICK
524	691876		SEAL, O-Ring
562	793514		BOLT -(Governor Lever)
598	593291		SHIM, End Play -(Crankshaft or Camshaft Bearing)
615	690340		RETAINER, Governor Shaft
616	590516		CRANK, Governor
623	799581		SEAL, O-Ring -(Carburetor Spacer)
718	690959		PIN, Locating -(Crankcase Cover)
741	796210		GEAR, Timing
842	691031		SEAL, O-Ring -(Dipstick Tube)
847	590572		DIPSTICK/TUBE ASSEMBLY
868	590534		SEAL, Valve -(Intake)

Not For Reproduction

Copyright © Briggs and Stratton. All Rights reserved

Camshaft, Crankshaft, Cylinder, Piston/Rings/Connecting Rod, Sump, Warning Label

Mfg. No: 09P602-0076-F1

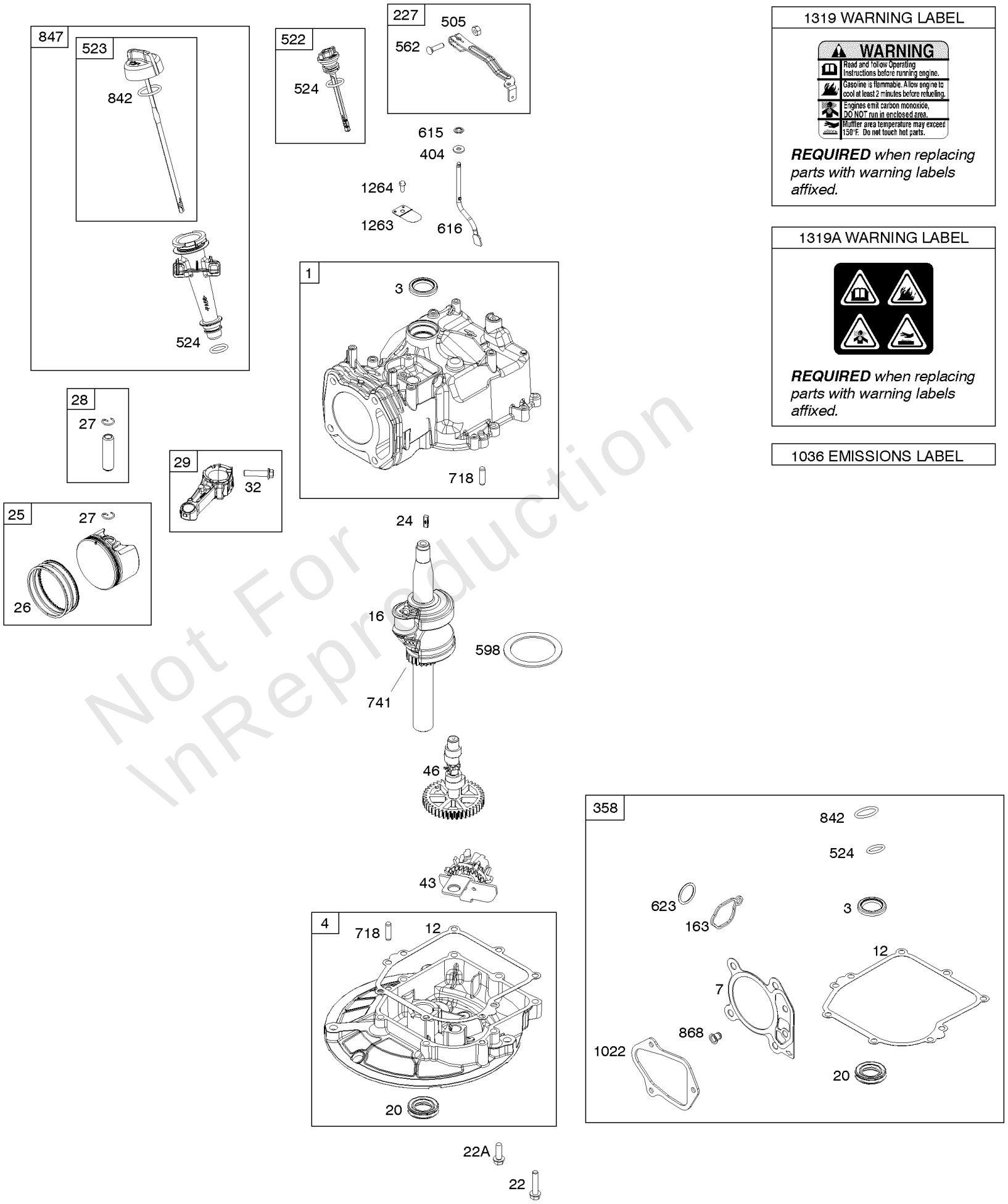

1319 WARNING LABEL

***REQUIRED** when replacing parts with warning labels affixed.*

1319A WARNING LABEL

***REQUIRED** when replacing parts with warning labels affixed.*

1036 EMISSIONS LABEL

Not For Reproduction

Copyright © Briggs and Stratton. All Rights reserved

Camshaft, Crankshaft, Cylinder, Piston/Rings/Connecting Rod, Sump, Warning Label

REF NO	PART NO	QTY	DESCRIPTION
1022	591255		GASKET, Rocker Cover
1036	-----		Label-Emissions -(Available From A Briggs & Stratton Authorized Dealer)
1263	697124		REED, Breather
1264	793453		SCREW -(Breather Reed)
1319	794467		LABEL, Warning
1319A	797669		LABEL, Warning

Not For\nReproduction

Copyright © Briggs and Stratton. All Rights reserved

Mfg. No: 09P602-0076-F1

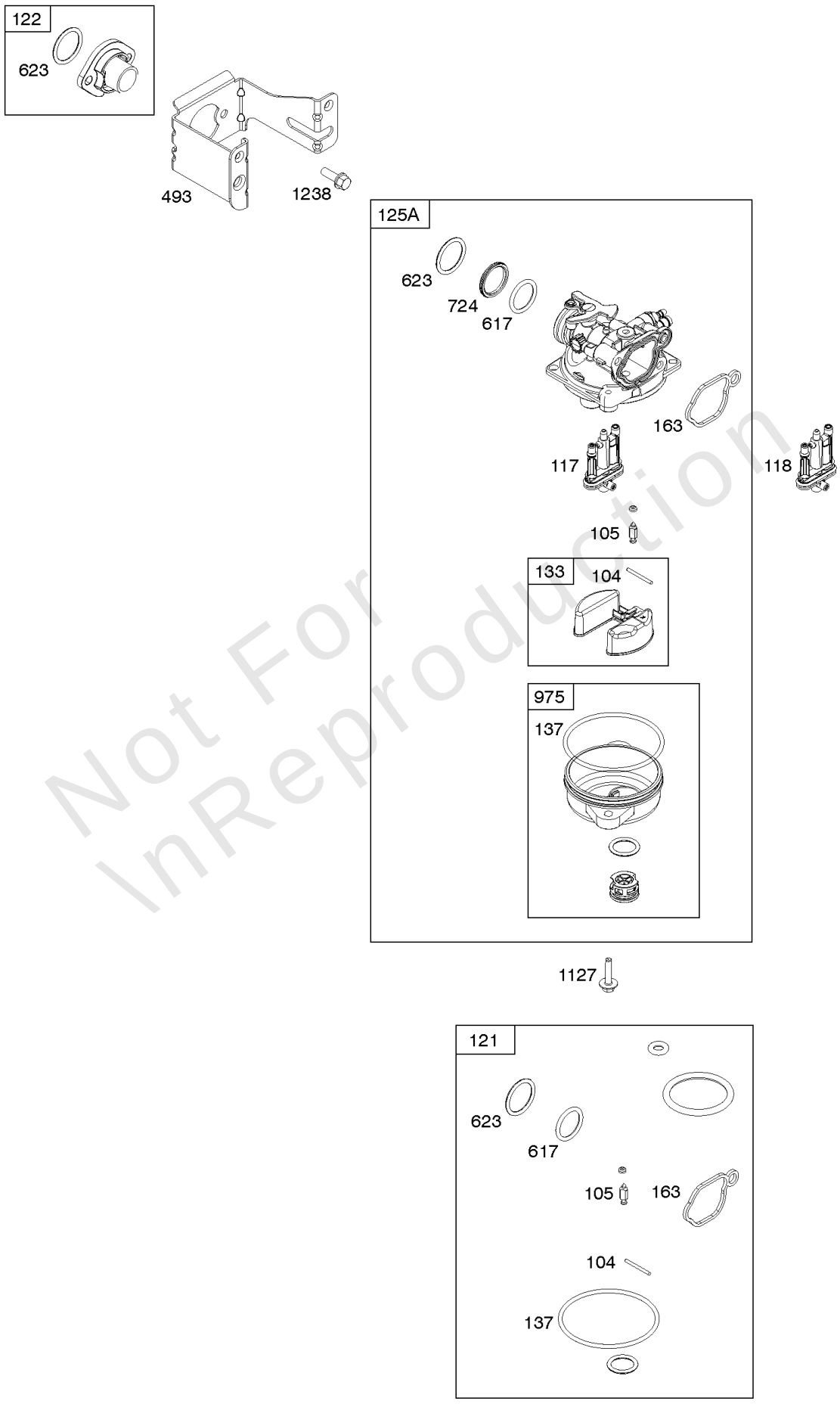

Not For Reproduction

Copyright © Briggs and Stratton. All Rights reserved

Carburetor

REF NO	PART NO	QTY	DESCRIPTION
104	590558		PIN, Float Hinge
105	594581		VALVE, Float Needle
117	592791		JET, Main -(Standard) -Used Before Code Date 18070100
117	84002085		JET, Main -(Standard) -Used After Code Date 18063000
118	592683		JET, Main -(High Altitude) -Used Before Code Date 18070100
118	84002086		JET, Main -(High Altitude) -Used After Code Date 18063000
121	590589		KIT, Carburetor Overhaul -Used Before Code Date 15030900
121	594636		KIT, Carburetor Overhaul -Used After Code Date 15030800
122	590549		SPACER, Carburetor
125A	799583		CARBURETOR -Used Before Code Date 18070100
125A	84002084		CARBURETOR -Used After Code Date 18063000
133	591120		FLOAT, Carburetor
137	593235		GASKET, Float Bowl -(Pack of 5) -Used Before Code Date 15030900
137	594633		GASKET, Float Bowl -(Pack of 5) -Used After Code Date 15030800
163	799580		GASKET, Air Cleaner -(Air Cleaner)
493	593330		BRACKET, Mounting -(Carburetor)
617	270344S		SEAL, O-Ring -(Intake Manifold)
623	799581		SEAL, O-Ring -(Carburetor Spacer)
724	697478		RETAINER, Seal
975	591492		BOWL, Float -Used Before Code Date 15030900
975	594632		BOWL, Float -Used After Code Date 15030800
1127	590554		SCREW -(Float Bowl to Carburetor Body)
1238	590562		SCREW -(Carburetor Spacer)

Not For Reproduction

Copyright © Briggs and Stratton. All Rights reserved

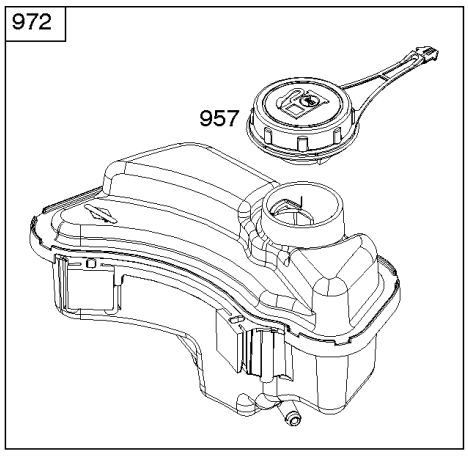

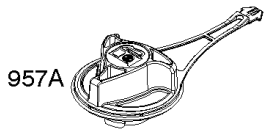

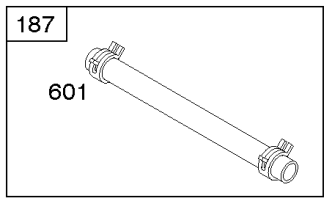

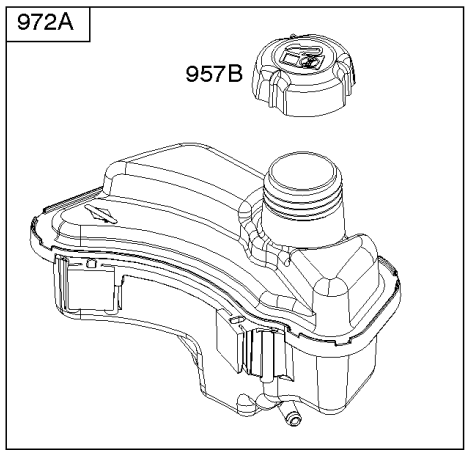

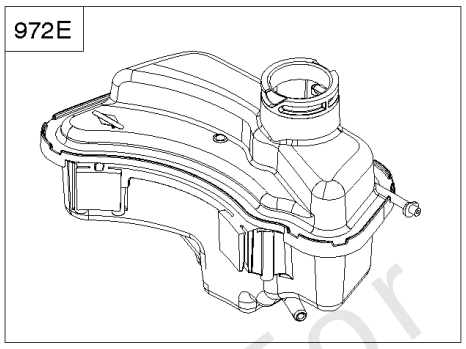

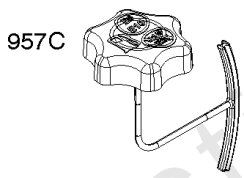

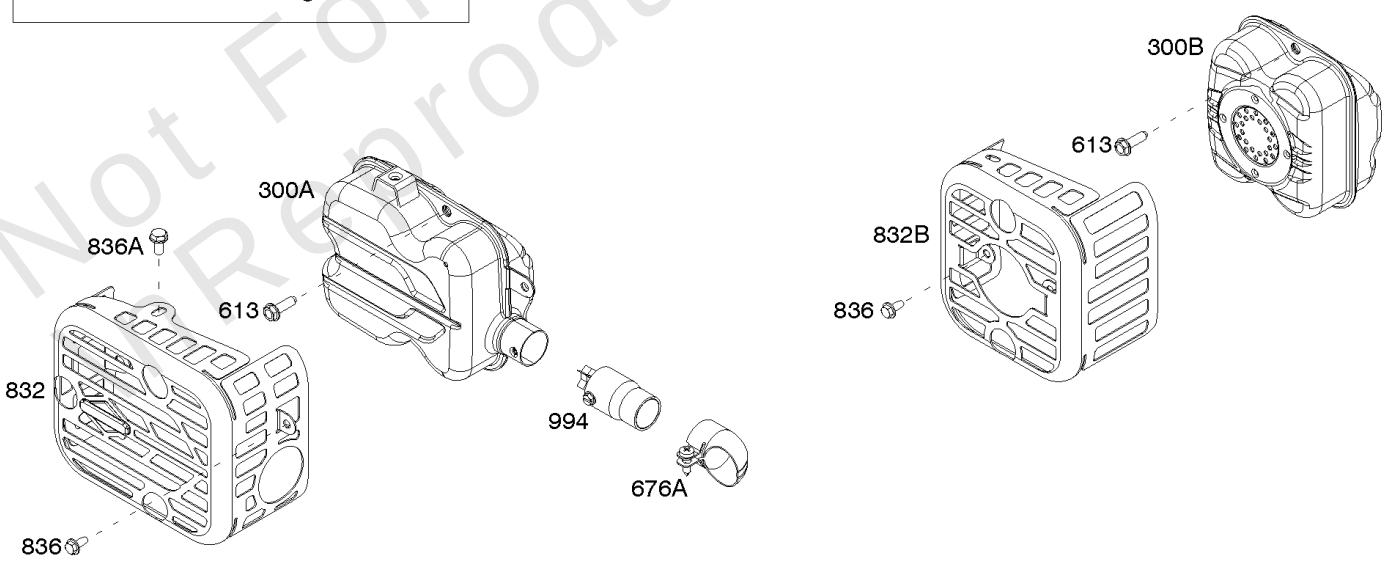

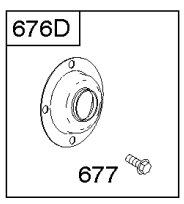

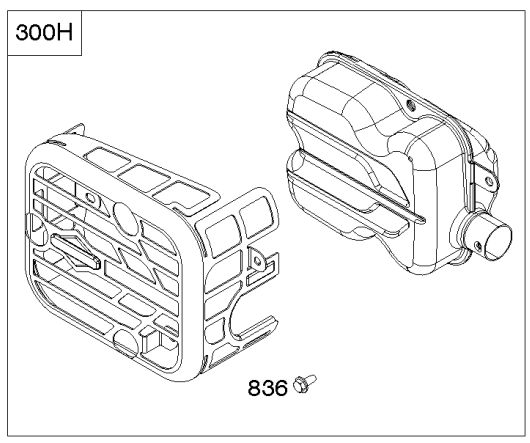

Not For Reproduction

Exhaust System, Fuel Supply

REF NO	PART NO	QTY	DESCRIPTION
187	791766		LINE, Fuel -(Cut To Required Length)
300B	590565		MUFFLER
601	791850		CLAMP, Hose
613	590562		SCREW -(Muffler)
676A	799187		DEFLECTOR, Muffler
677	690661		SCREW -(Muffler Deflector)
832	590566		GUARD, Muffler
832B	592709		MUFFLER
836	690661		SCREW -(Muffler Guard)
836A	793500		SCREW -(Muffler Guard)
957	799585		CAP, Fuel Tank -(Black) -Used Before Code Date 16100300
957C	596250		CAP, Fuel Tank -Used After Code Date 16100200
972	590568		TANK, Fuel -Used Before Code Date 16100300
972E	596251		TANK, Fuel -Used After Code Date 16100200
994	690813		ARRESTOR, Spark

Not For Reproduction

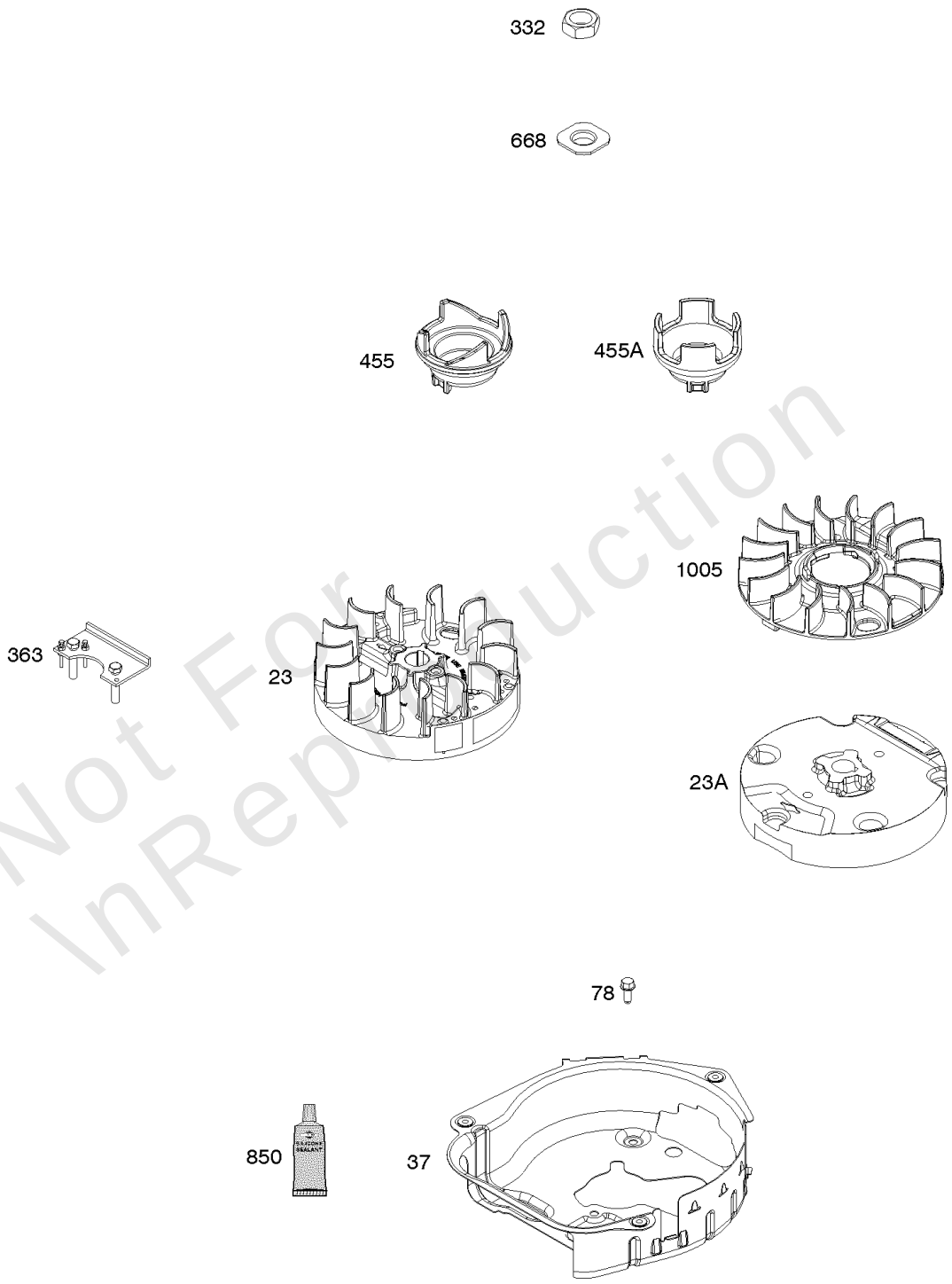

Not For Reproduction

Flywheel

REF NO	PART NO	QTY	DESCRIPTION
23	590544		FLYWHEEL
23A	592005		FLYWHEEL
37	594729		GUARD, Flywheel
78	793480		SCREW -(Flywheel Guard)
332	690662		NUT -(Flywheel)
363	19619		PULLER, Flywheel
455	590545		CUP, Flywheel -Used Before Code Date 14082500
455A	593960		CUP, Flywheel -(To Be Used With Reference 608) -Used After Code Date 14082400
668	590546		SPACER
850	100106		SEALANT, Liquid
1005	592050		FAN, Flywheel

Not For\nReproduction

Replacement Engine - US & Canada

REF NO	PART NO	QTY	DESCRIPTION
	93J020086	1	Replacement Engine
	-----		Top No-Load Speed: 3200 -Trim: F1
	-----		Service Note: Transfer Governor Spring to replacement engine.

Not For\nReproduction

Copyright © Briggs and Stratton. All Rights reserved