Parts Manual

Mfg. No: 58A447-0305-E2

Copyright © Briggs and Stratton. All Rights reserved

10-Mar-2020

Model Components

Page

1.0 Kw Starter Motor Green/Blue Label. 4
1.2 Kw Starter Motor Purple/Brown Label. 6
40 AMP Alternator. 8
Air Cleaner, Air Cleaner Hose. 10
Cylinder Head, Rocker Cover. 12
Cylinder, Back Plate, Oil. 14
Engine/Valve Gasket Sets. 16
Fuel Filter, Fuel Injection Pump, Glow Plugs. 18
Gear Housing, Drive Gear. 20
Label Kit, Emissions Label, Repair Manual. 22
Oil Pan, Oil Pump Screen. 24
Piston, Crankshaft, Flywheel. 26
Radiator, Radiator Hoses, Reserve Tank. 28
Replacement Engine - US & Canada. 30
Rocker Arm Shaft, Camshaft, Cam Gear. 31
Timing Gear Cover, Coil Trigger. 33
Turbo Charger, Intake Manifold, Exhaust Manifold. 35
Water Pipe, Water Lines. 37
Water Pump, Radiator Fan, Fan Belt. 39

Not For
InReproduction

Copyright © Briggs and Stratton. All Rights reserved

1.0 KW GREEN/BLUE LABEL

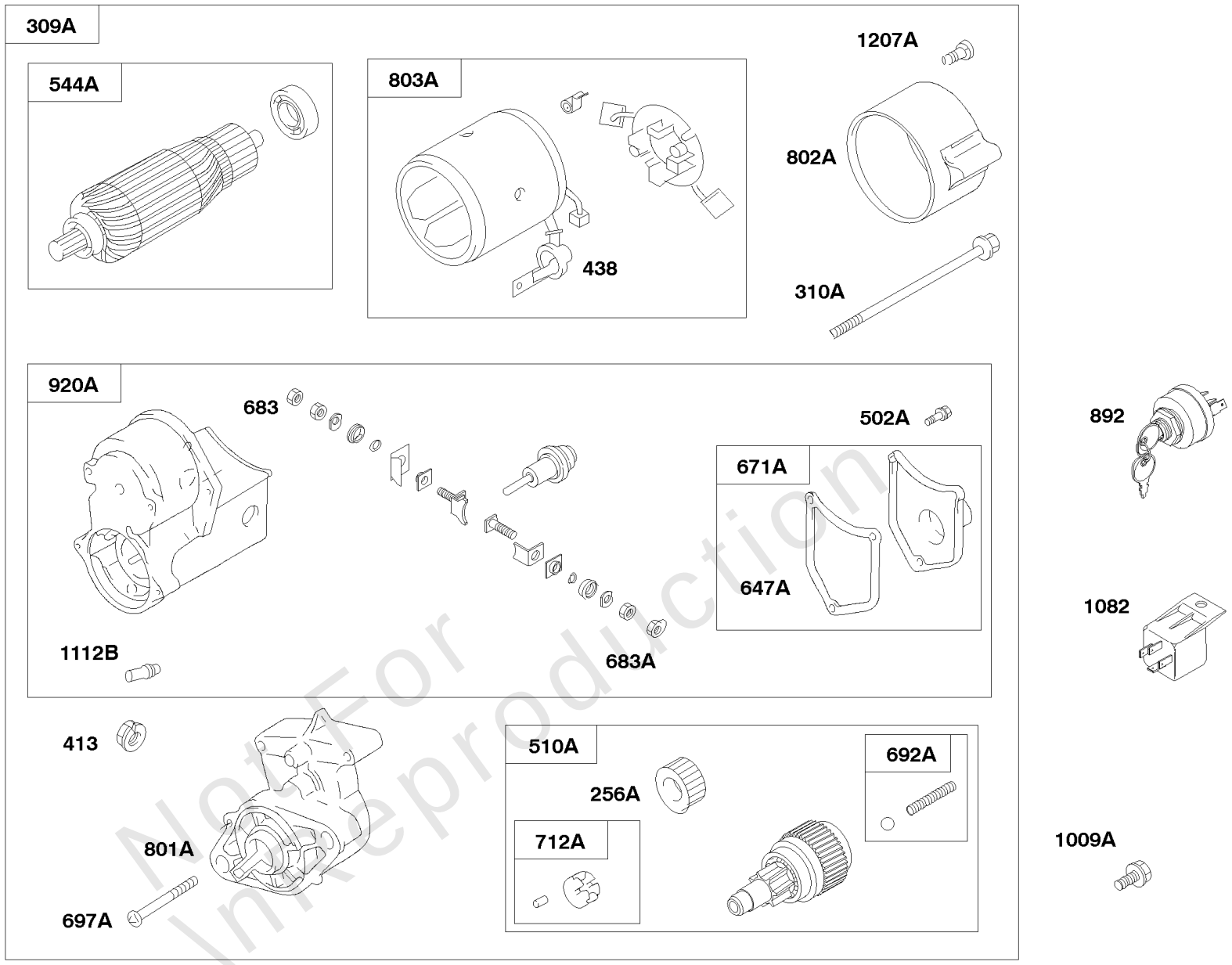

Not For Unreproduction

REF. NO.	PART NO.	DESCRIPTION
256A	**820745**	Gear-Starter Drive
309A		Motor-Starter (For Replacement Starter Motor, Order Reference 309)
310A	**820755**	Bolt (Starter Motor)
413	**820067**	Nut (Starter Motor)
438	**820725**	Boot-Terminal
502A	**820739**	Screw (Solenoid Cover)
510A	**825394**	Drive-Starter
544A	**825392**	Armature-Starter
647A	**820733**	Gasket-Solenoid Cover
671A	**825400**	Cover-Solenoid
683	**820723**	Nut (Starter Solenoid) (Terminal)
683A	**820721**	Nut (Starter Solenoid) (Terminal)
692A	**825425**	Spring-Detent
697A	**820751**	Screw (Drive Cap)
801A	**825396**	Cap-Drive
802A	**820743**	Cap-End
803A	**825399**	Housing-Starter
892	**692318**	Switch-Key
920A	**825398**	Solenoid-Starter
1009A	**820019**	Screw (Starter Motor)
1082	**820455**	Relay-Starter
1112B	**820737**	Plug-Vent (Starter Solenoid)
1207A	**820754**	Screw (End Cap)

Copyright © Briggs and Stratton. All Rights reserved

1.0 Kw Starter Motor Green/Blue Label

REF NO	PART NO	QTY	DESCRIPTION
256A	820745		GEAR, Starter Drive
309A	-----		Motor-Starter -(For Replacement Starter Motor, Order Reference 309)
310A	820755		SCREW -(Starter Motor)
413	820067		NUT -(Starter Motor)
438	820725		BOOT, Terminal
502A	820739		SCREW -(Solenoid Cover)
510A	825394		DRIVE, Starter
544A	825392		ARMATURE, Starter
647A	820733		GASKET, Solenoid Cover
671A	825400		COVER, Solenoid
683	820723		NUT -(Starter Solenoid) (Terminal)
683A	820721		NUT -(Starter Solenoid) (Terminal)
692A	825425		SPRING, Detent
697A	820751		SCREW -(Drive Cap)
712A	825424		ROLLER, Clutch
801A	825396		CAP, Drive
802A	820743		CAP, End
803A	825399		HOUSING, Starter
892	692318		SWITCH, Key
920A	825398		SOLENOID, Starter
1009A	820019		SCREW -(Starter Motor)
1082	820455		RELAY, Starter
1112B	820737		PLUG, Vent -(Starter Solenoid)
1207A	820754		SCREW -(End Cap)

Not For Reproduction

Mfg. No: 58A447-0305-E2

1.2 KW PURPLE/BROWN LABEL

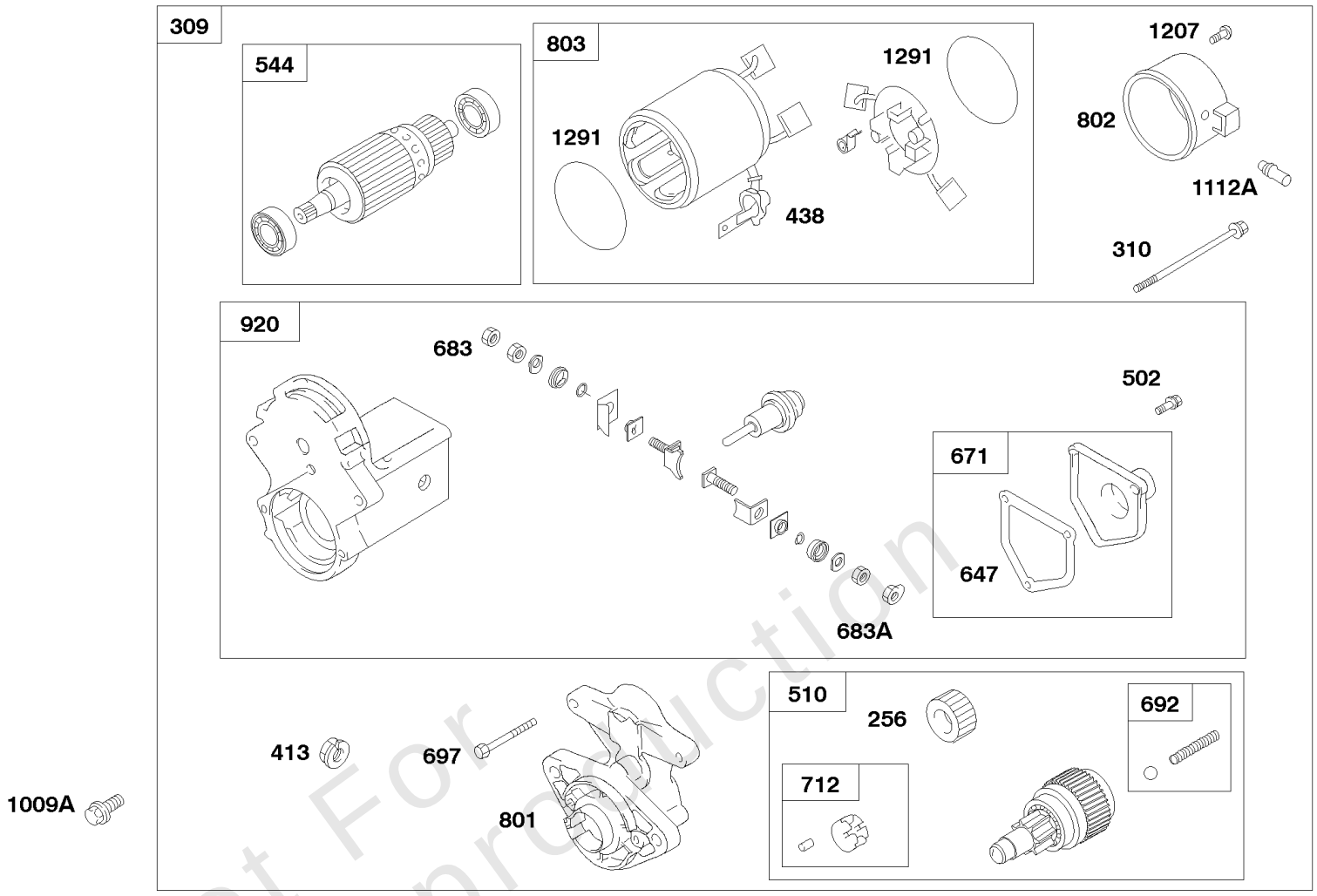

REF. NO.	PART NO.	DESCRIPTION
256	**820767**	Gear-Starter Drive
309	**825700**	Motor-Starter
310	**820773**	Bolt (Starter Motor)
413	**820067**	Nut (Starter Motor)
438	**820725**	Boot-Terminal
502	**820763**	Screw (Solenoid Cover)
510	**825406**	Drive-Starter
544	**825404**	Armature-Starter
647	**820719**	Gasket-Solenoid Cover
671	**825703**	Cover-Solenoid (Used After Code Date 05022800). **------- Note -----** **825422** Cover-Solenoid (Used Before Code Date 05030100).
683	**820723**	Nut (Starter Solenoid) (Terminal)
683A	**820721**	Nut (Starter Solenoid) (Terminal)
692	**825402**	Spring-Detent
697	**820777**	Screw (Drive Cap)
712	**825401**	Roller-Clutch
801	**821228**	Cap-Drive (Used After Code Date 05022800). **------- Note -----** **825408** Cap-Drive (Used Before Code Date 05030100).
802	**821231**	Cap-End (Used After Code Date 05022800). **------- Note -----** **820771** Cap-End (Used Before Code Date 05030100).
803	**825423**	Housing-Starter
920	**825702**	Solenoid-Starter (Used After Code Date 05022800). **------- Note -----** **825410** Solenoid-Starter (Used Before Code Date 05030100).
1009A	**820019**	Screw (Starter Motor)
1112A	**820779**	Plug-Vent (End Cap)
1207	**820775**	Screw (End Cap)

Not For Production

Copyright © Briggs and Stratton. All Rights reserved

1.2 Kw Starter Motor Purple/Brown Label

REF NO	PART NO	QTY	DESCRIPTION
256	820767		GEAR, Starter Drive
309	825700		MOTOR, Starter -(1.2 KW)(Purple/Brown Label)
310	820773		SCREW -(Starter Motor)
413	820067		NUT -(Starter Motor)
438	820725		BOOT, Terminal
502	820763		SCREW -(Solenoid Cover)
510	825406		DRIVE, Starter
544	825404		ARMATURE, Starter
647	820719		GASKET, Solenoid Cover
671	825422		COVER, Solenoid -Used Before Code Date 05030100
671	825703		COVER, Solenoid -Used After Code Date 05022800
683	820723		NUT -(Starter Solenoid) (Terminal)
683A	820721		NUT -(Starter Solenoid) (Terminal)
692	825402		SPRING, Detent
697	820777		SCREW -(Drive Cap)
712	825401		ROLLER, Clutch
801	821228		CAP, Drive -Used After Code Date 05022800
801	825408		CAP, Drive -Used Before Code Date 05030100
802	820771		CAP, End -Used Before Code Date 05030100
802	821231		CAP, End -Used After Code Date 05022800
803	825423		HOUSING, Starter
920	825410		SOLENOID, Starter -Used Before Code Date 05030100
920	825702		SOLENOID, Starter -Used After Code Date 05022800
1009A	820019		SCREW -(Starter Motor)
1112A	820779		PLUG, Vent -(End Cap)
1207	820775		SCREW -(End Cap)
1291	820769		SEAL, O-Ring -(Starter Housing) (Starter Housing)

Not For Reproduction

Mfg. No: 58A447-0305-E2

40 AMP

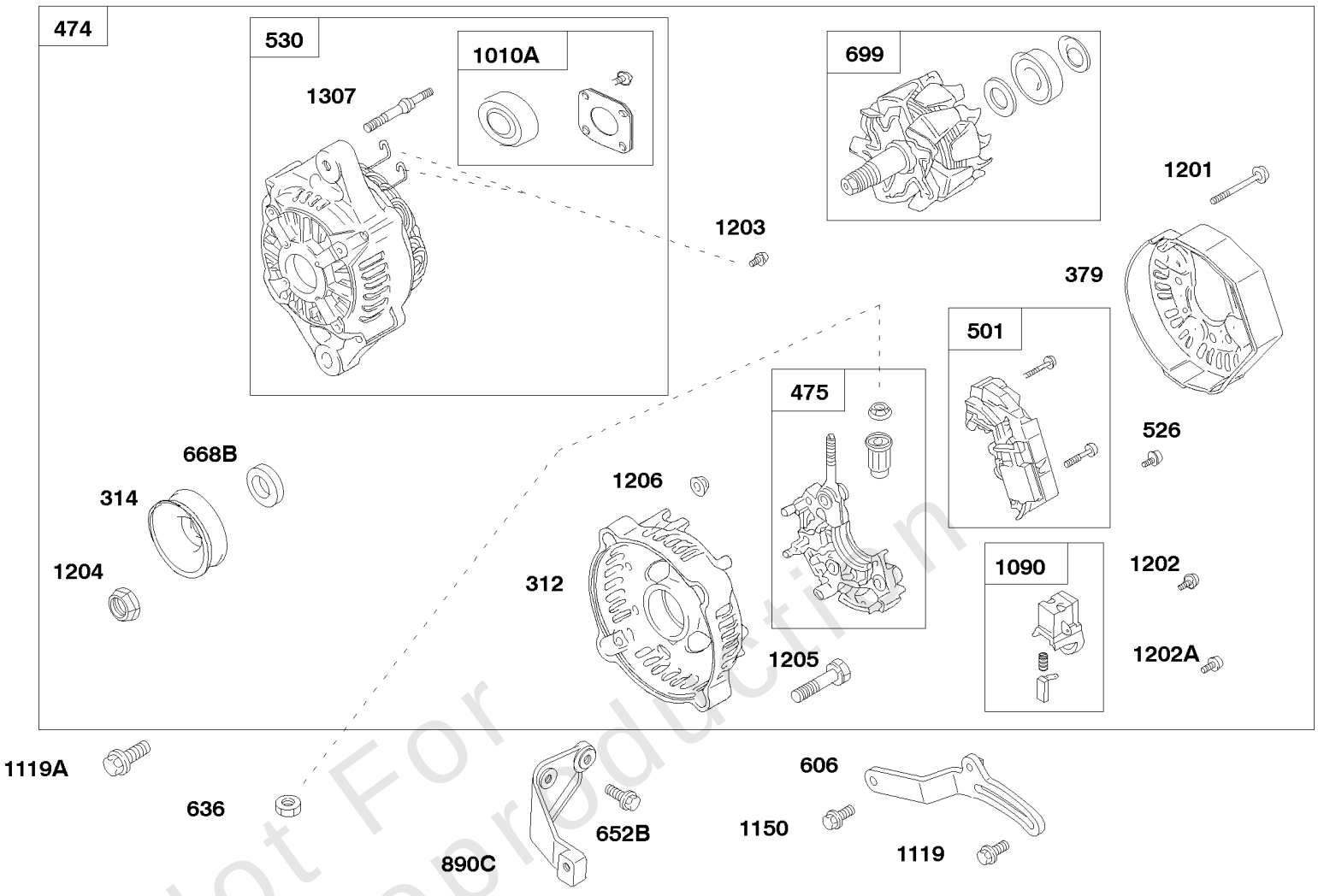

REF. NO.	PART NO.	DESCRIPTION
312	820938	Housing-Brush End
314	820711	Pulley-Alternator
379	820703	Cover-Brush
474	825524	Alternator
475	825385	Rectifier
501	825388	Regulator
526	820702	Screw (Regulator)
530	825526	Housing-Drive End
606	820819	Strap-Adjusting
636	820069	Nut (Starting Switch)
652B	820275	Screw (Support Bracket)
668B	820713	Spacer (Alternator)
699	825390	Rotor Assembly
890C	820213	Bracket-Support
1010A	825384	Retainer-Bearing
1090	825387	Retainer-Brush
1119	820483	Screw (Alternator)
1119A	820270	Screw (Alternator)
1150	820023	Screw (Adjusting Strap)
1201	820715	Screw (Brush Cover)
1202	820701	Screw (Brush Retainer)
1202A	820702	Screw (Brush Retainer)
1203	820702	Screw (Stator Wire)
1204	820705	Nut (Alternator Pulley)
1205	820707	Screw (Brush End Housing)
1206	820709	Nut (Brush End Housing)
1307	820690	Stud (Drive End Housing)

Not For Reproduction

Copyright © Briggs and Stratton. All Rights reserved

40 AMP Alternator

REF NO	PART NO	QTY	DESCRIPTION
312	820938		HOUSING, Brush End
314	820711		PULLEY, Alternator
379	820703		COVER, Brush
474	825524		ALTERNATOR -(40 Amp)
475	825385		RECTIFIER
501	825388		REGULATOR
526	820702		SCREW -(Regulator)
530	825526		HOUSING, Drive End
606	820819		STRAP, Adjusting
636	820069		NUT -(Starting Switch)
652B	820275		SCREW -(Support Bracket)
668B	820713		SPACER -(Alternator)
699	825390		ROTOR ASSEMBLY
890C	820213		BRACKET, Support
1010A	825384		RETAINER, Bearing
1090	825387		RETAINER, Brush
1119	820483		SCREW -(Alternator)
1119A	820270		SCREW -(Alternator)
1150	820023		SCREW -(Adjusting Strap)
1201	820715		SCREW -(Brush Cover)
1202	820701		SCREW -(Brush Retainer)
1202A	820702		SCREW -(Brush Retainer)
1203	820702		SCREW -(Stator Wire)
1204	820705		NUT -(Alternator Pulley)
1205	820707		SCREW -(Brush End Housing)
1206	820709		NUT -(Brush End Housing)
1307	820690		STUD -(Drive End Housing)

Not For Reproduction

Copyright © Briggs and Stratton. All Rights reserved

Air Cleaner, Air Cleaner Hose

Mfg. No: 58A447-0305-E2

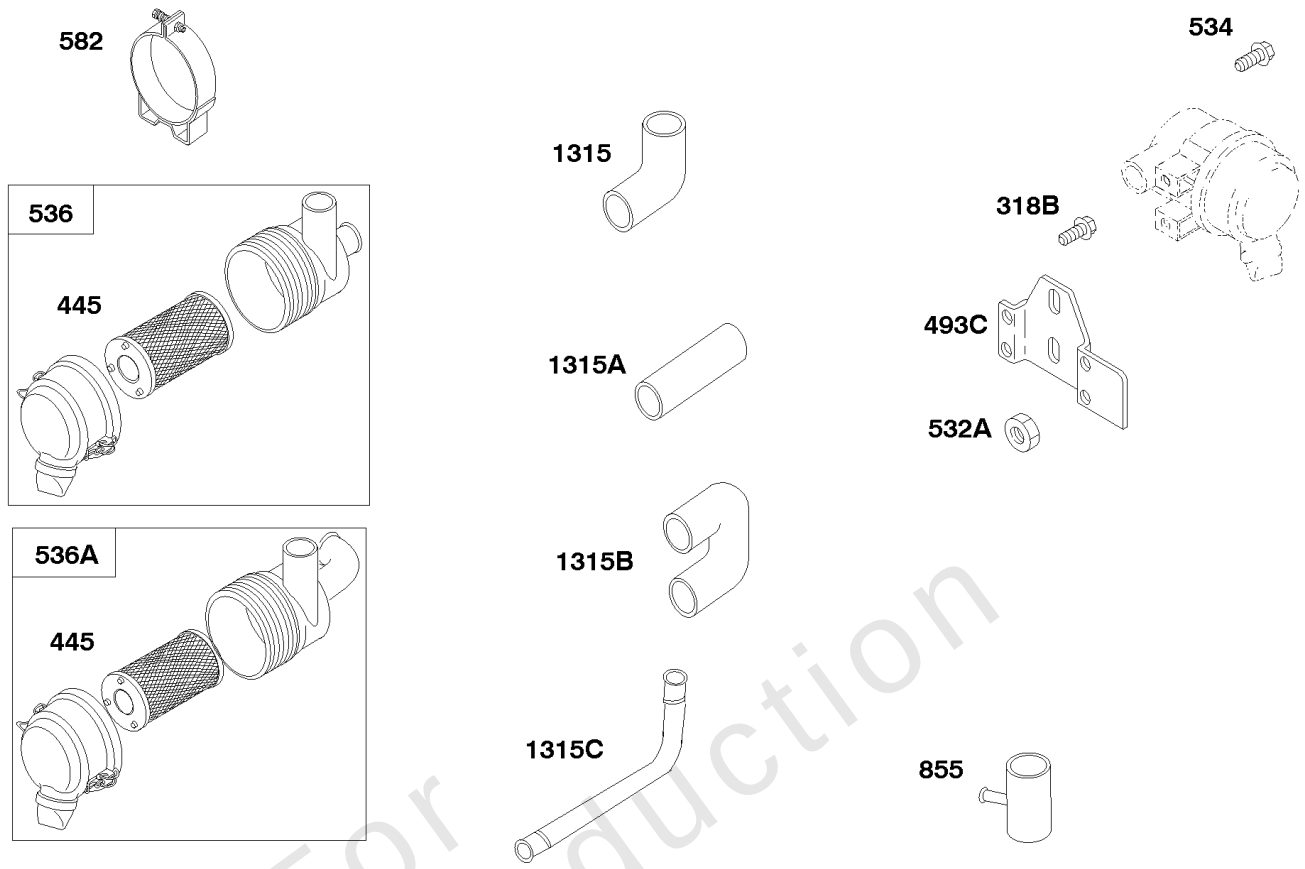

REF. NO.	PART NO.	DESCRIPTION
318B	**820212**	Screw (Mounting Bracket)
445	**820263**	Filter- Air Cleaner Cartridge
493C	**820195**	Bracket-Mounting (Air Cleaner)
532A	**820070**	Nut (Mounting Bracket)
534	**820273**	Screw (Air Cleaner)
536	**825117**	Cleaner-Air (Vacuum Adaptor)
536A	**825118**	Cleaner-Air (90 Degree Elbow)
582	**820230**	Clamp-Air Cleaner
855	**820942**	Adapter-Air Cleaner
1315	**820554**	Hose-Air Cleaner
1315A	**820555**	Hose-Air Cleaner
1315B	**820556**	Hose-Air Cleaner
1315C	**821253**	Hose-Air Cleaner

Not For Reproduction

Copyright © Briggs and Stratton. All Rights reserved

Air Cleaner, Air Cleaner Hose

REF NO	PART NO	QTY	DESCRIPTION
318B	820212		SCREW -(Mounting Bracket)
445	820263		FILTER, A/C Cartridge
493C	820195		BRACKET, Mounting -(Air Cleaner)
532A	820070		NUT -(Mounting Bracket)
534	820273		SCREW -(Air Cleaner)
536	825117		CLEANER, Air -(Vacuum Adaptor)
536A	825118		CLEANER, Air -(90 Degree Elbow)
582	820230		CLAMP, Air Cleaner
855	820942		ADAPTER, Air Cleaner
1315	820554		HOSE, Air Cleaner
1315A	820555		HOSE, Air Cleaner
1315B	820556		HOSE, Air Cleaner
1315C	821253		HOSE, Air Cleaner

Not For\nReproduction

Copyright © Briggs and Stratton. All Rights reserved

Cylinder Head, Rocker Cover

Mfg. No: 58A447-0305-E2

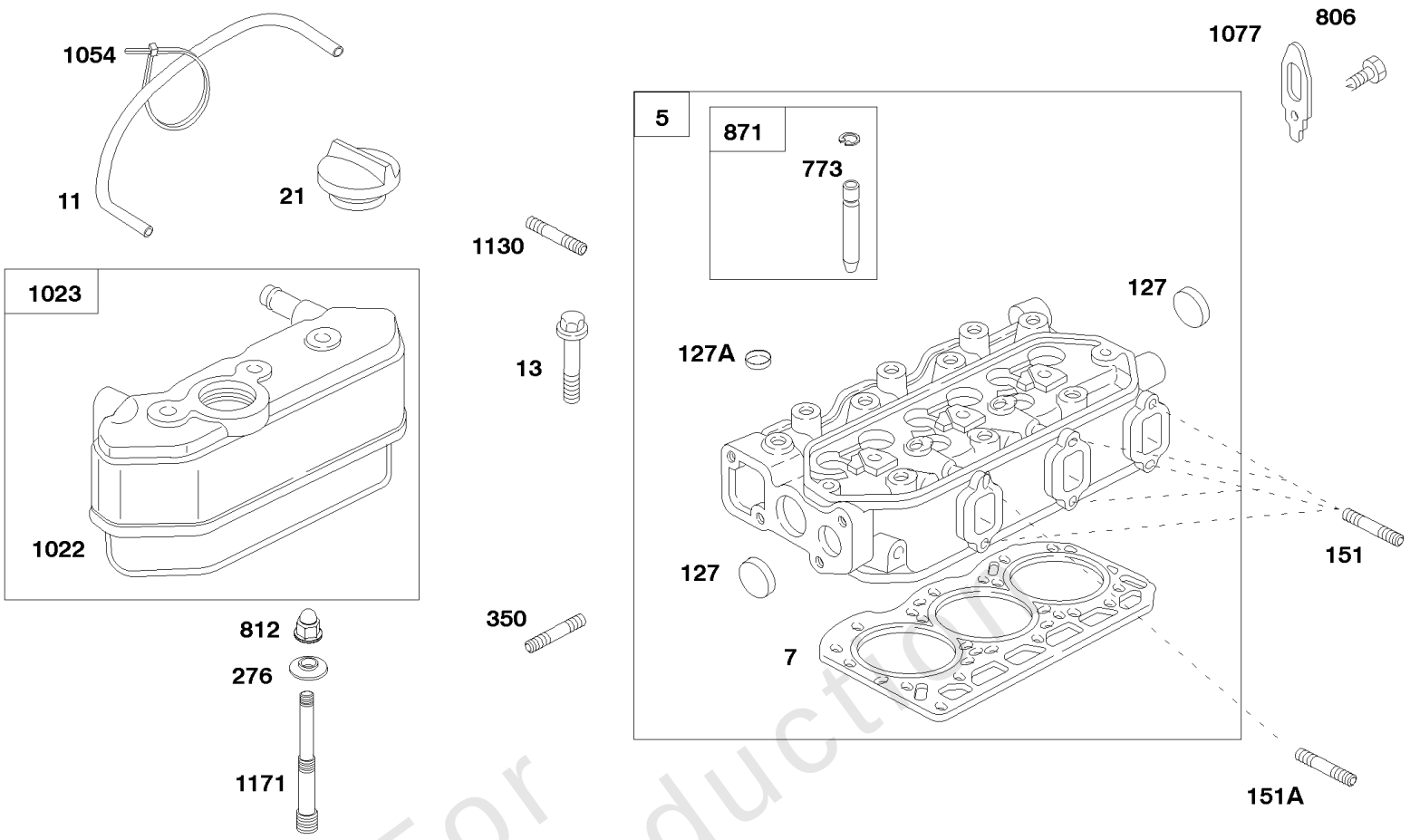

REF. NO.	PART NO.	DESCRIPTION
5	**825685**	Head-Cylinder
7	**821270**	Gasket-Cylinder Head
11	**820932**	Tube-Breather (540mm)
13	**820934**	Screw (Cylinder Head) (10mm)
21	**825024**	Cap-Oil Fill
127	**820004**	Plug-Welch
127A	**820005**	Plug-Welch
151	**820997**	Stud (Exhaust Manifold)
151A	**820999**	Stud (Exhaust Manifold)
276	**820064**	Washer-Sealing (Rocker Cover)
350	**820078**	Stud (Water Pump)
773	**820130**	Retainer (Valve Guide Bushing)
806	**820212**	Screw (Lifting Bracket)
812	**820071**	Nut (Rocker Cover)
871	**825030**	Bushing-Valve Guide
1022	**820150**	Gasket-Rocker Cover
1023	**825672**	Cover-Rocker
1054	**280275**	Tie-Cable
1077	**820254**	Bracket-Lifiting
1130	**820015**	Stud (Intake Manifold)
1171	**820076**	Stud (Rocker Cover)

Not For Reproduction

Copyright © Briggs and Stratton. All Rights reserved

Cylinder Head, Rocker Cover

REF NO	PART NO	QTY	DESCRIPTION
5	825685		HEAD, Cylinder
7	821270		GASKET, Cylinder Head
11	820932		TUBE, Breather -(540 mm)
13	820934		SCREW -(Cylinder Head) (10mm)
21	825024		CAP, Oil Fill
127	820004		PLUG, Welch
127A	820005		PLUG, Welch
151	820997		STUD -(Exhaust Manifold)
151A	820999		STUD -(Exhaust Manifold)
276	820064		WASHER, Sealing -(Rocker Cover)
350	820078		STUD -(Water Pump)
773	820130		RETAINER -(Valve Guide Bushing)
806	820212		SCREW -(Lifting Bracket)
812	820071		NUT -(Rocker Cover)
871	825030		BUSHING, Valve Guide
1022	820150		GASKET, Rocker Cover
1023	825672		COVER, Rocker
1054	280275		TIE, Cable
1077	820254		BRACKET, Lifting
1130	820015		STUD -(Intake Manifold)
1171	820076		STUD -(Rocker Cover)

Not For Reproduction

Copyright © Briggs and Stratton. All Rights reserved

Cylinder, Back Plate, Oil

Mfg. No: 58A447-0305-E2

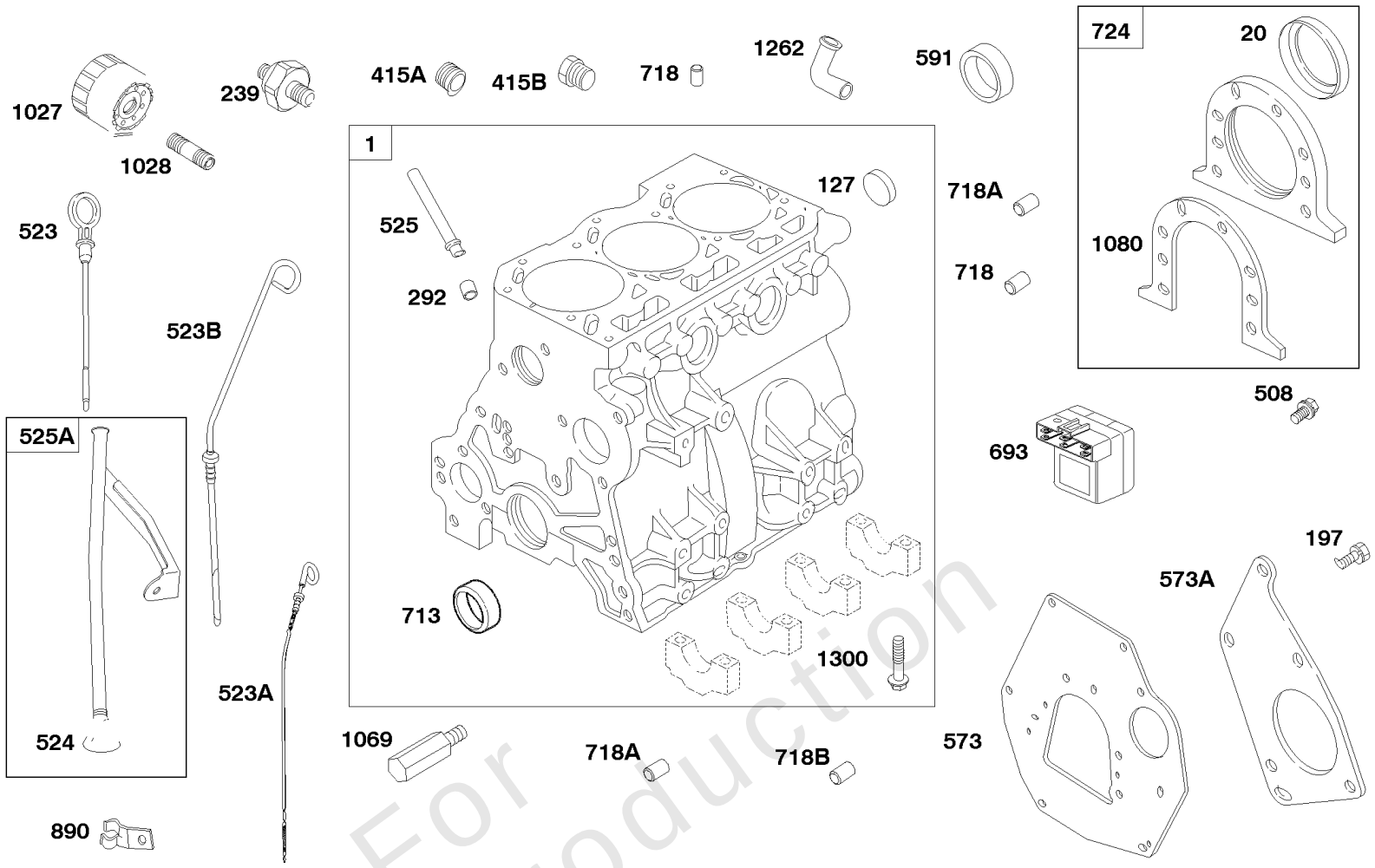

REF. NO.	PART NO.	DESCRIPTION
1	**825599**	Cylinder Assembly
20	**821328**	Seal-Oil (PTO Side)
127	**820004**	Plug-Welch
197	**820176**	Screw (Back Plate)
239	**821135**	Switch-Oil Pressure
292	**820662**	Collar-Dipstick Tube
415A	**820375**	Plug
415B	**820182**	Plug (Cylinder) Used on Type No(s). 0209, 0309.
508	**820031**	Screw (Seal Retainer)
523	**821158**	Dipstick
523A	**820643**	Dipstick Used on Type No(s). 0231.
523B	**820572**	Dipstick Used on Type No(s). 0376.
524	**820654**	Seal-Dipstick Tube Used on Type No(s). 0231.
525	**820144**	Tube-Dipstick
525A	**820666**	Tube-Dipstick Used on Type No(s). 0231.
573	**820170**	Plate-Back
573A	**820147**	Plate-Back
591	**821069**	Plug-Camshaft
693	**821319**	Module-Pre Heat (Used After Code Date 07063000).
		------- Note -----
		820373 Module-Pre Heat (Used Before Code Date 07070100).
713	**821299**	Bushing-Camshaft
718	**820063**	Pin-Locating
718A	**820062**	Pin-Locating
718B	**820061**	Pin-Locating
724	**825731**	Retainer-Seal
890	**820238**	Bracket-Support
1027	**820314**	Filter-Oil
1028	**820851**	Adapter-Oil Filter
1069	**820102**	Nozzle-Oil
1080	**820145**	Gasket-Seal Retainer
1262	**821009**	Line-Water
1300	**820042**	Screw (Crankshaft Bearing Cap)

Not For Reproduction

Copyright © Briggs and Stratton. All Rights reserved

Cylinder, Back Plate, Oil

REF NO	PART NO	QTY	DESCRIPTION
1	825599		CYLINDER ASSEMBLY
20	821328		SEAL, Oil -(PTO Side)
127	820004		PLUG, Welch
197	820176		SCREW -(Back Plate)
239	821135		SWITCH, Oil Pressure
292	820662		COLLAR, Dipstick Tube
415A	820375		PLUG -(Cylinder)
415B	820182		PLUG
508	820031		SCREW -(Seal Retainer)
523	821158		DIPSTICK
525	820144		TUBE, Dipstick
573	820170		PLATE, Back
573A	820147		PLATE, Back
591	821069		PLUG, Camshaft
693	820373		MODULE, Pre Heat -Used Before Code Date 07070100
693	821319		MODULE, Pre Heat -Used After Code Date 07063000
713	821299		BUSHING, Camshaft
718	820063		PIN, Locating
718A	820062		PIN, Locating
718B	820061		PIN, Locating
724	825731		RETAINER, Seal
890	820238		BRACKET, Support
1027	820314		FILTER, Oil
1028	820851		ADAPTER, Oil Filter
1069	820102		NOZZLE, Oil
1080	820145		GASKET, Seal Retainer
1262	821009		LINE, Water
1300	820042		SCREW -(Crankshaft Bearing Cap)

Not For Reproduction

Mfg. No: 58A447-0305-E2

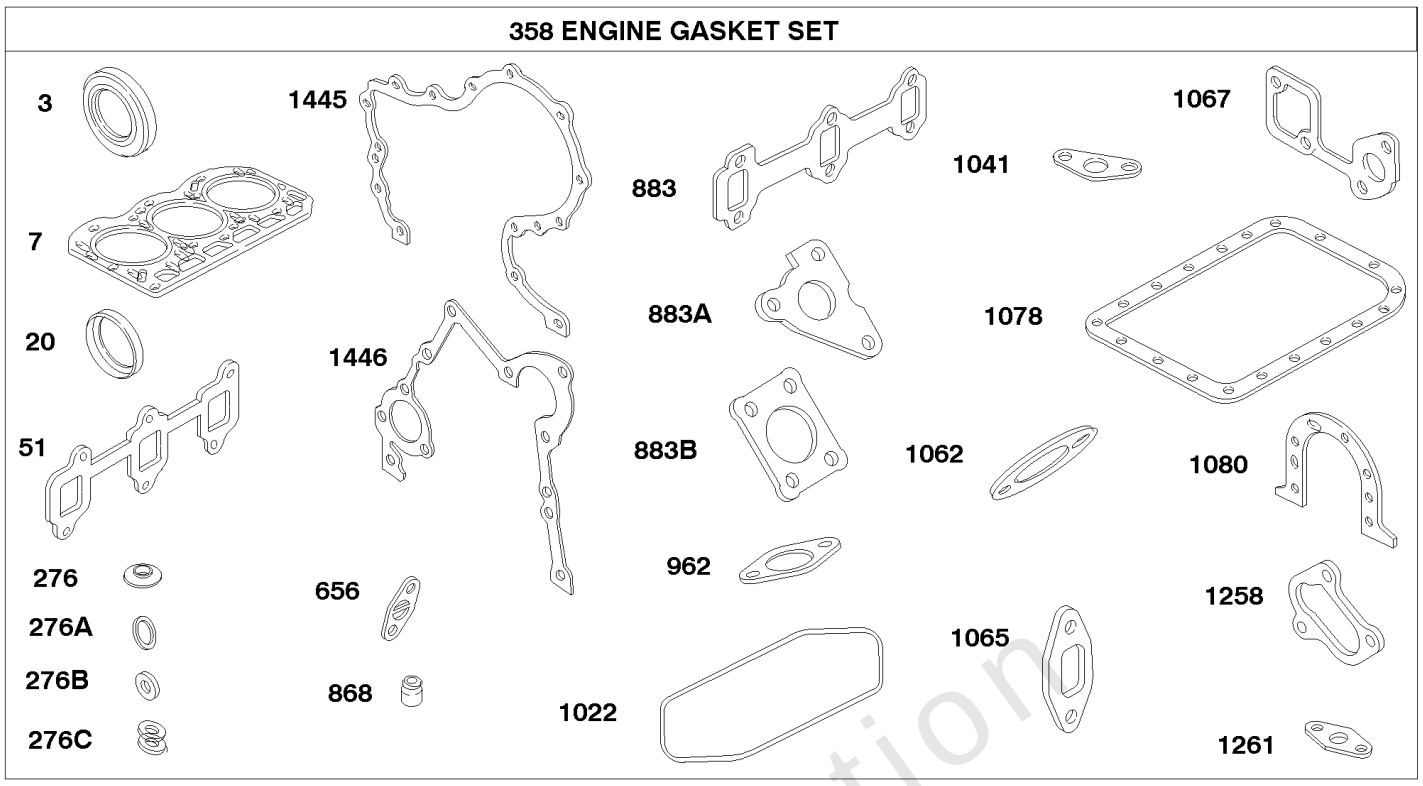

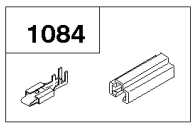

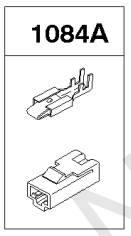

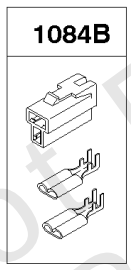

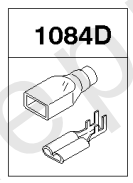

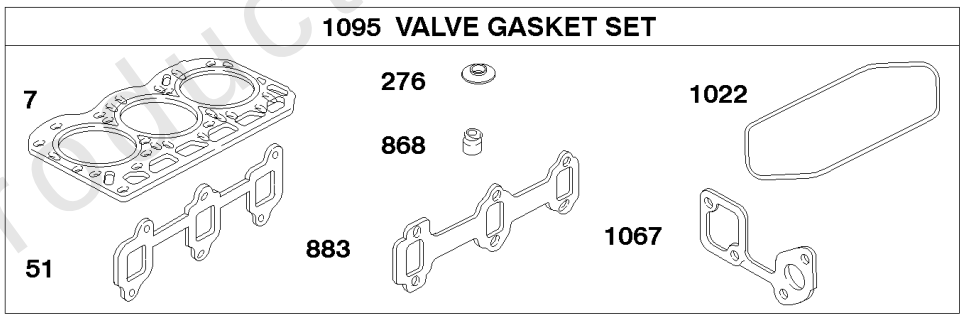

REF. NO.	PART NO.	DESCRIPTION
3	**821326**	Seal-Oil (Magneto Side)
7	**820930**	Gasket-Cylinder Head
20	**821328**	Seal-Oil (PTO Side)
51	**820407**	Gasket-Intake
276	**820064**	Washer-Sealing (Rocker Cover)
276A	**820582**	Washer-Sealing (Oil Drain Plug)
276B	**820950**	Washer-Sealing (Oil Inlet Pipe)
276C	**820952**	Washer-Sealing (Oil Inlet Pipe)
358	**825527**	Gasket Set-Engine
656	**820962**	Gasket-Water Pipe
868	**820405**	Seal-Valve
883	**820817**	Gasket-Exhaust (Manifold)
883A	**820967**	Gasket-Exhaust (Turbo Charger)
883B	**821001**	Gasket-Exhaust
962	**820988**	Gasket-Air Inlet Pipe
1022	**820150**	Gasket-Rocker Cover
1041	**820104**	Gasket- Oil Pump Screen
1062	**820093**	Gasket- Outlet Housing
1065	**820098**	Gasket-Inlet Housing
1067	**820100**	Gasket-Water Pump
1078	**820137**	Gasket-Oil Pan
1080	**820145**	Gasket-Seal Retainer
1084	**825154**	Connector-Terminal
1084A	**825266**	Connector-Terminal
1084B	**825157**	Connector-Terminal
1084D	**825160**	Connector-Terminal
1095	**825528**	Gasket Set-Valve
1258	**820890**	Gasket- Muffler Adapter
1261	**820973**	Gasket-Oil Outlet
1445	**820377**	Gasket- Timing Gear Cover
1446	**820155**	Gasket- Gear Housing

Not For Reproduction

Copyright © Briggs and Stratton. All Rights reserved

Engine/Valve Gasket Sets

REF NO	PART NO	QTY	DESCRIPTION
3	821326		SEAL, Oil -(Magneto Side)
7	821270		GASKET, Cylinder Head
20	821328		SEAL, Oil -(PTO Side)
51	820407		GASKET, Intake
276	820064		WASHER, Sealing -(Rocker Cover)
276A	820582		WASHER, Sealing -(Oil Drain Plug)(16mm)
276B	820950		WASHER, Sealing -(Oil Inlet Pipe)
276C	820952		WASHER, Sealing -(Oil Inlet Pipe)
358	825527		GASKET SET, Engine
656	820962		GASKET, Water Pipe
868	820405		SEAL, Valve
883	820817		GASKET, Exhaust -(Manifold)
883A	820967		GASKET, Exhaust -(Turbo Charger)
962	820988		GASKET, Air Inlet Pipe
1022	820150		GASKET, Rocker Cover
1041	820104		GASKET, Oil Pump Screen
1062	820093		GASKET, Outlet Housing
1065	820098		GASKET, Inlet Housing
1067	820100		GASKET, Water Pump
1078	820137		GASKET, Oil Pan
1080	820145		GASKET, Seal Retainer
1084	825154		CONNECTOR, Terminal
1084A	825266		CONNECTOR, Terminal
1084D	825160		CONNECTOR, Terminal
1084B	825157		CONNECTOR, Terminal
1095	825528		GASKET SET, Valve
1258	820990		GASKET, Muffler Adapter
1261	820973		GASKET, Oil Outlet
1445	820377		GASKET, Gear Cover/Housing
1446	820155		GASKET, Gear Cover/Housing

Not For Reproduction

Copyright © Briggs and Stratton. All Rights reserved

Fuel Filter, Fuel Injection Pump, Glow Plugs

Mfg. No: 58A447-0305-E2

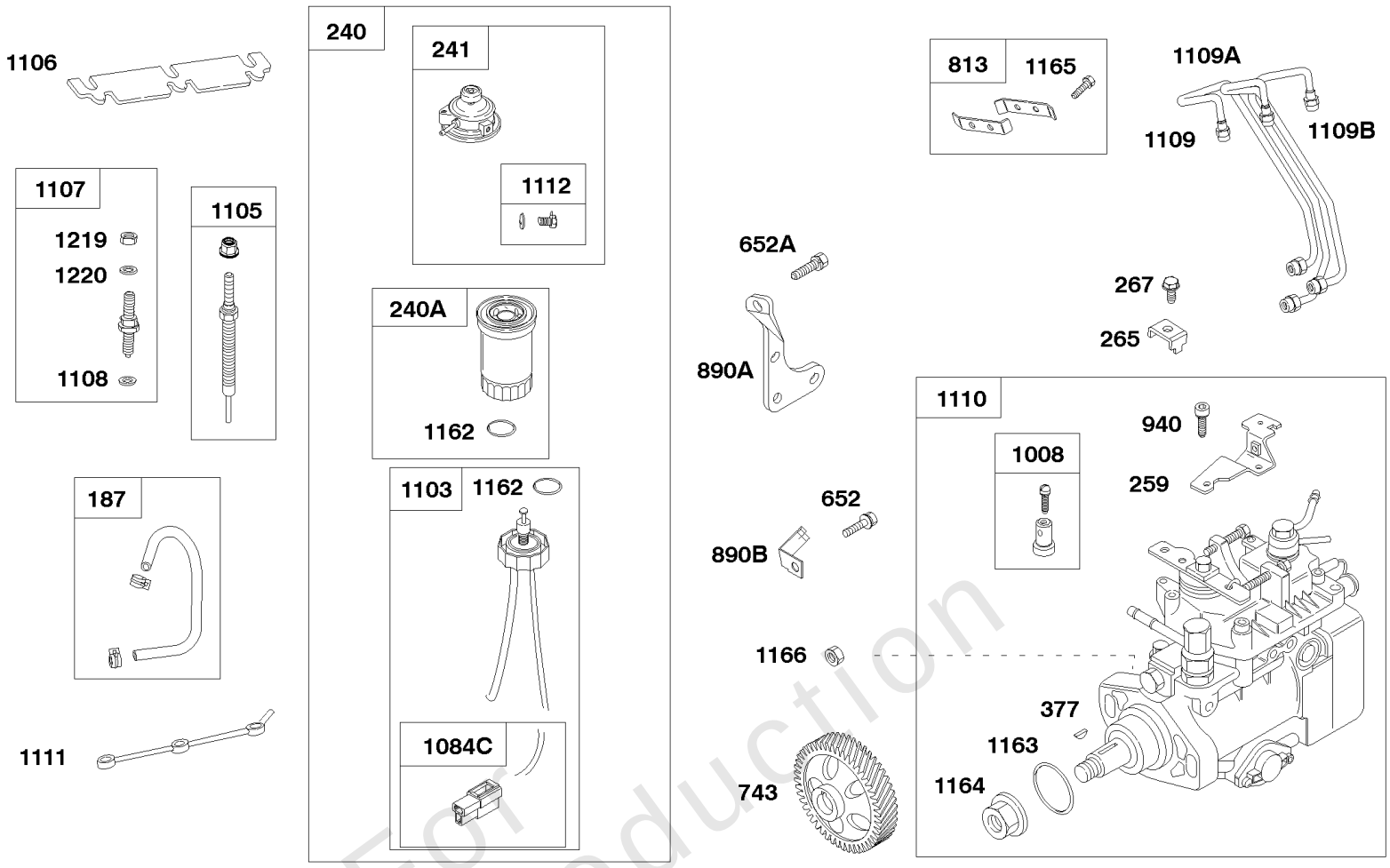

REF. NO.	PART NO.	DESCRIPTION
187	**825179**	Line-Fuel
240	**825219**	Filter-Fuel
240A	**820311**	Filter-Fuel
241	**821251**	Cover-Fuel Filter
259	**820634**	Bracket-Casing Clamp
265	**691024**	Clamp-Casing
267	**820012**	Screw (Casing Clamp)
377	**821064**	Key-Woodruff
652	**820593**	Screw (Support Bracket) Used on Type No(s). 0376.
652A	**820272**	Screw (Support Bracket)
743	**820619**	Gear-Drive (Fuel Injection Pump)
813	**825197**	Clamp (Injector Pipe)
890	**820415**	Bracket-Support
890A	**820479**	Bracket-Support Used on Type No(s). 0376.
940	**820640**	Screw (Casing

REF. NO.	PART NO.	DESCRIPTION
1008	**820467**	Clamp-Swivel
1084C	**825156**	Connector-Terminal
1103	**820347**	Sensor-Fuel Filter
1105	**821308**	Plug-Glow
1106	**820409**	Strap-Glow Plug
1107	**825754**	Nozzle-Injector (Used After Code Date 07063000). **------- Note -----** **825178** Nozzle-Injector (Used Before Code Date 07070100).
1108	**820411**	Seat-Injector
1109	**825194**	Pipe-Injector # 1
1109A	**825195**	Pipe-Injector # 2
1109B	**825196**	Pipe-Injector # 3
1110	**825752**	Pump-Injection (Used After Code Date 07063000). **------- Note -----** **825606** Pump Injection (Used Before Code

REF. NO.	PART NO.	DESCRIPTION
1111	**820412**	Pipe-Fuel Return
1112	**825198**	Plug-Vent (Fuel Filter)
1162	**820348**	Seal-O Ring (Fuel Filter Sensor)
1163	**820414**	Seal-O Ring (Injection Pump Shaft)
1164	**820419**	Nut (Injection Pump)
1165	**820031**	Screw (Clamp)
1166	**820417**	Nut (Injection Pump)
1219	**820829**	Nut (Injector Nozzle)
1220	**820831**	Washer (Injector Nozzle)

Not For Reproduction

Copyright © Briggs and Stratton. All Rights reserved

Fuel Filter, Fuel Injection Pump, Glow Plugs

REF NO	PART NO	QTY	DESCRIPTION
187	825179		LINE, Fuel
240	825219		FILTER, Fuel
240A	820311		FILTER, Fuel
241	821251		COVER, Fuel Filter
259	820634		BRACKET, Casing Clamp
265	691024		CLAMP, Casing
267	820012		SCREW -(Casing Clamp)
309	825700		MOTOR, Starter -(1.2 KW)(Purple/Brown Label)
377	821064		KEY, Woodruff
652A	820272		SCREW -(Support Bracket)
743	820619		GEAR, Drive -(Fuel Injection Pump)
813	825197		CLAMP -(Injector Pipe)
890A	820415		BRACKET, Support
940	820640		SCREW -(Casing Clamp Bracket)
1008	820467		CLAMP, Swivel
1084C	825156		CONNECTOR, Terminal
1103	820347		SENSOR, Fuel Filter
1105	821308		PLUG, Glow
1106	820409		STRAP, Glow Plug
1107	825178		NOZZLE, Injector -Used Before Code Date 07070100
1107	825754		NOZZLE, Injector -Used After Code Date 07063000
1108	820411		SEAT, Injector
1109	825194		PIPE, Injector -(Cylinder 1)
1109A	825195		PIPE, Injector -(Cylinder 2)
1109B	825196		PIPE, Injector -(Cylinder 3)
1110	825752		PUMP, Fuel Injection -Used After Code Date 07063000
1110	825606		PUMP, Fuel Injection -Used Before Code Date 07070100
1111	820412		PIPE, Fuel Return
1112	825198		PLUG, Vent -(Fuel Filter)
1162	820348		SEAL, O-Ring -(Fuel Filter Sensor)
1163	820414		SEAL, O-Ring -(Injection Pump Shaft)
1164	820419		NUT -(Injection Pump Shaft)
1165	820031		SCREW -(Clamp)
1166	820417		NUT -(Injection Pump)
1219	820829		NUT -(Injector Nozzle)
1220	820831		WASHER -(Injector Nozzle)

Not For Reproduction

Copyright © Briggs and Stratton. All Rights reserved

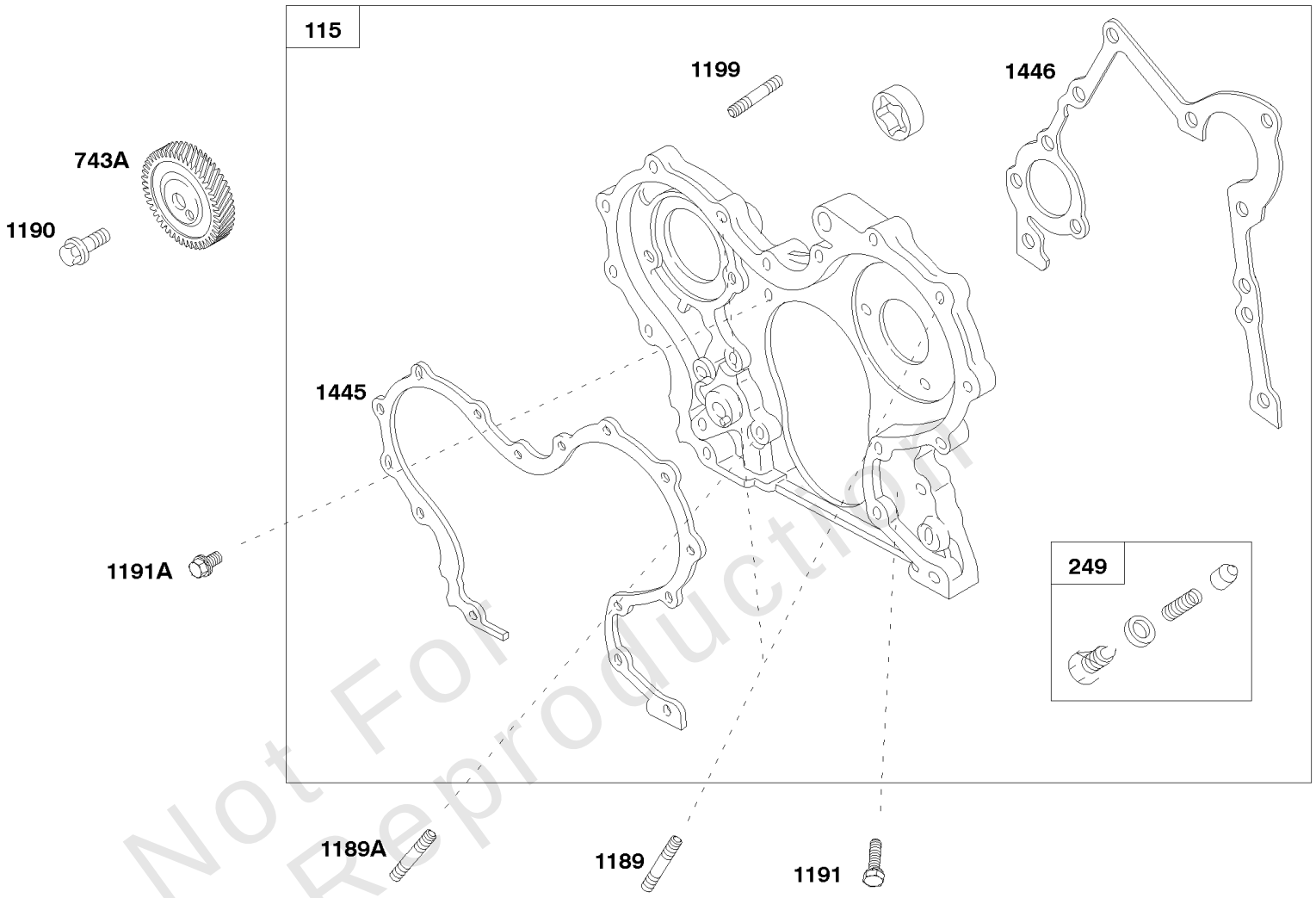

Not For Reproduction

REF. NO.	PART NO.	DESCRIPTION	REF. NO.	PART NO.	DESCRIPTION	REF. NO.	PART NO.	DESCRIPTION
115	**825186**	Housing-Gear	**1190**	**820180**	Screw (Drive Gear)	**1445**	**820377**	Gasket- Timing Gear Cover
249	**825032**	Valve-Pressure Relief	**1191**	**820030**	Screw (Gear Housing)	**1446**	**820155**	Gasket-Housing Gear
743A	**820615**	Gear-Drive (Gear Housing)	**1191A**	**820033**	Screw (Gear Housing)			
1189	**820156**	Stud (Gear Housing)	**1199**	**820426**	Stud (Injection Pump)			
1189A	**820016**	Stud (Gear Housing)						

Copyright © Briggs and Stratton. All Rights reserved

Gear Housing, Drive Gear

REF NO	PART NO	QTY	DESCRIPTION
115	825186		HOUSING, Gear
249	825032		VALVE, Pressure Relief
743A	820615		GEAR, Drive -(Gear Housing)
1189	820156		STUD -(Gear Housing)
1189A	820016		STUD -(Gear Housing)
1190	820180		SCREW -(Drive Gear)
1191	820030		SCREW -(Gear Housing)
1191A	820033		SCREW -(Gear Housing)
1199	820426		STUD -(Injection Pump)
1445	820377		GASKET, Gear Cover/Housing
1446	820155		GASKET, Gear Cover/Housing

Not For\nReproduction

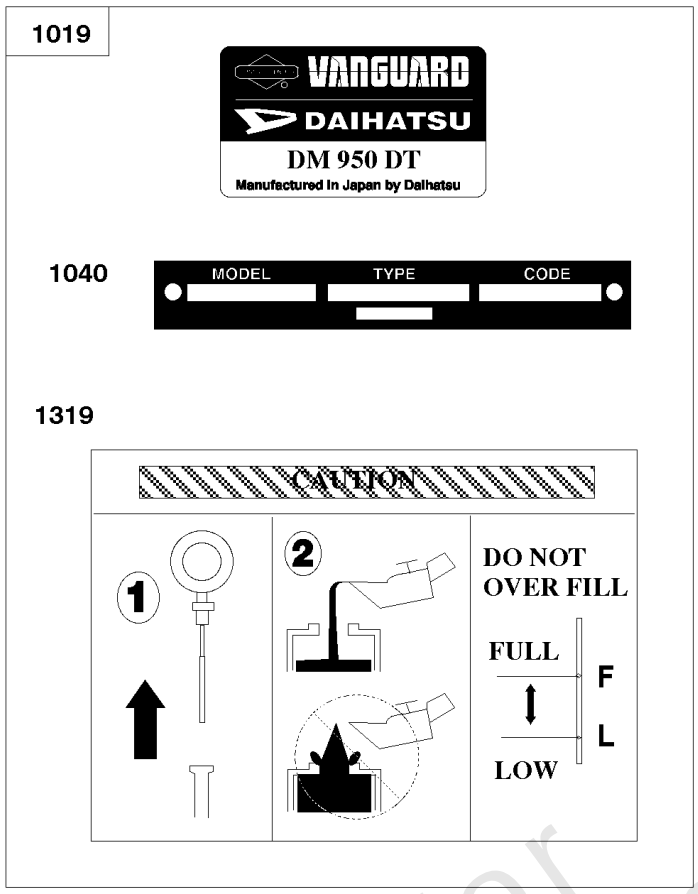

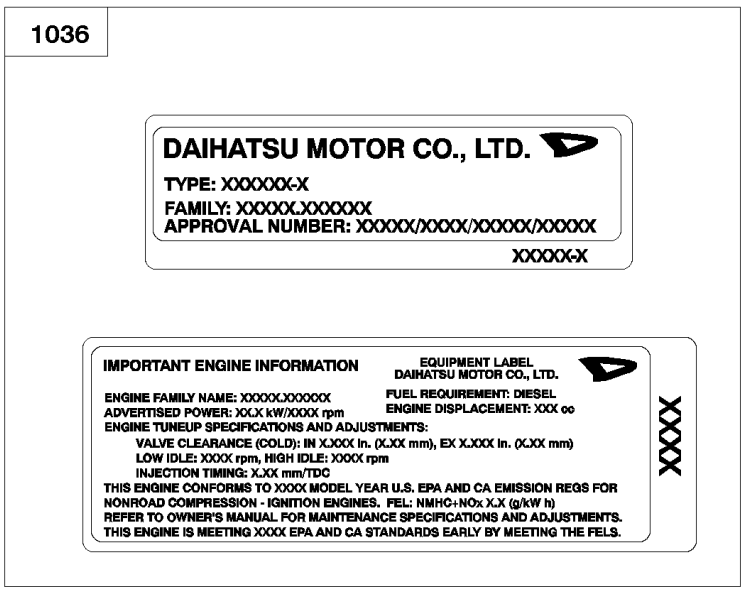

1058 OPERATOR'S MANUAL

1330 REPAIR MANUAL

Not For Reproduction

REF. NO.	PART NO.	DESCRIPTION
1019	**825634**	Kit-Label
1036		Label-Emissions (Available from a Briggs & Stratton Authorized Dealer)
1040	**820290**	Plate-Trim
1058	**820853**	Operator's Manual
1319	**820891**	Label-Warning
1330	**MS1055**	Repair Manual (Refer to Repair Manual For Assembly and Torque Requirements)

Copyright © Briggs and Stratton. All Rights reserved

Label Kit, Emissions Label, Repair Manual

REF NO	PART NO	QTY	DESCRIPTION
1019	825634		KIT, Label -(Identification Labels)
1036	-----		Label-Emissions -(Available From A Briggs & Stratton Authorized Dealer)
1040	820290		PLATE, Trim
1058	820853		MANUAL, Operator's
1319	821160		LABEL, Warning
1330	MS1055		MANUAL, Repair -(Refer to Repair Manual For Assembly and Torque Requirements)

Not For\nReproduction

Oil Pan, Oil Pump Screen

Mfg. No: 58A447-0305-E2

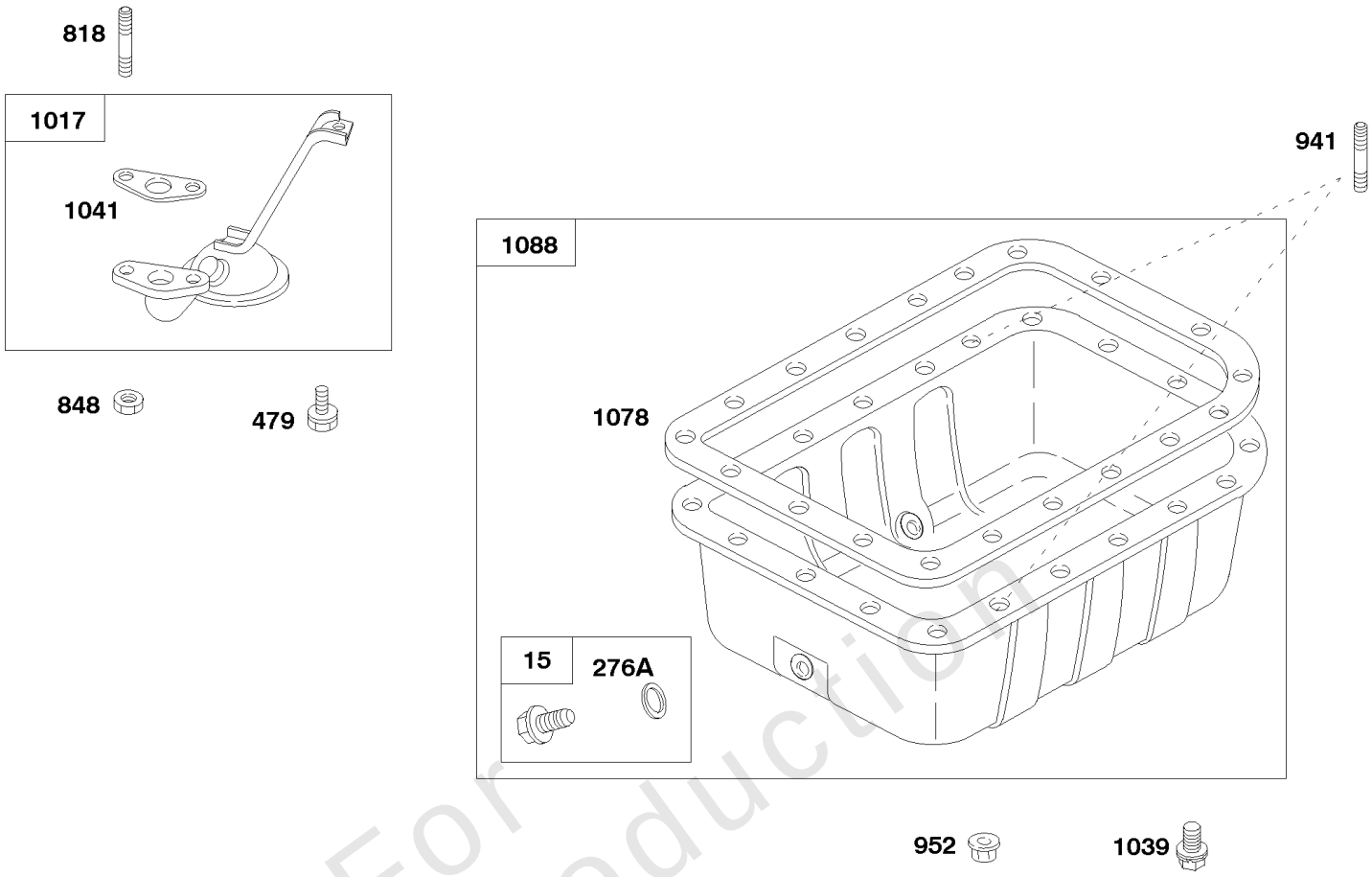

REF. NO.	PART NO.	DESCRIPTION
15	**825278**	Plug-Oil Drain
276A	**820582**	Washer-Sealing (Oil Drain Plug)
479	**821233**	Screw (Oil Pump Screen)
818	**820016**	Stud (Oil Pump Screen)
848	**820069**	Nut (Oil Pump Screen)
941	**820017**	Stud (Oil Pan)
952	**820068**	Nut (Oil Pan)
1017	**825089**	Screen-Oil Pump
1039	**821233**	Screw (Oil Pan)
1041	**820104**	Gasket-Oil Pump Screen
1078	**820137**	Gasket-Oil Pan
1088	**825734**	Pan-Oil (Dual Drain)

Not For Reproduction

Copyright © Briggs and Stratton. All Rights reserved

Oil Pan, Oil Pump Screen

REF NO	PART NO	QTY	DESCRIPTION
15	825278		PLUG, Oil Drain
276A	820582		WASHER, Sealing -(Oil Drain Plug)(16mm)
479	821233		SCREW -(Oil Pump Screen)
818	820016		STUD -(Oil Pump Screen)
848	820069		NUT -(Oil Pump Screen)
941	820017		STUD -(Oil Pan)
952	820068		NUT -(Oil Pan)
1017	825089		SCREEN, Oil Pump
1039	821233		SCREW -(Oil Pan)
1041	820104		GASKET, Oil Pump Screen
1078	820137		GASKET, Oil Pan
1088	825734		PAN, Oil -(Dual Drain)

Not For\nReproduction

Copyright © Briggs and Stratton. All Rights reserved

Piston, Crankshaft, Flywheel

Mfg. No: 58A447-0305-E2

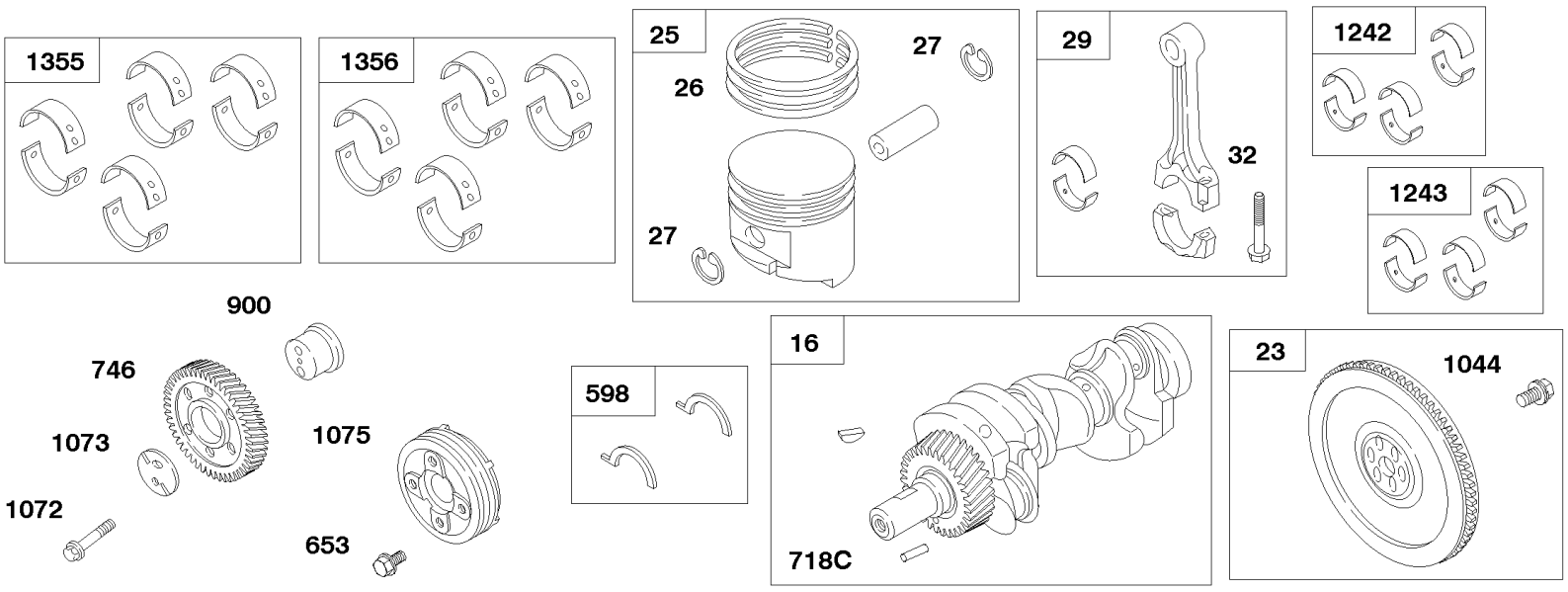

REF. NO.	PART NO.	DESCRIPTION
16	**825494**	Crankshaft
23	**825303**	Flywheel
25	**825796**	Piston Assembly (Standard)
		------- Note -----
		825801 Piston Assembly (.010" Oversize)
26	**825512**	Ring Set (Standard)
		------- Note -----
		825514 Ring Set (.010" Oversize)
27	**820926**	Lock-Piston Pin
29	**825736**	Rod-Connecting
32	**820928**	Screw (Connecting Rod)
598	**821295**	Shim-Endplay (Crankshaft) (Standard)
		------- Note -----
		821297 Shim-Endplay (Crankshaft) (.005" Oversize)
653	**820079**	Screw (Crankshaft Pulley)
718C	**820059**	Pin-Locating
746	**820611**	Gear-Idler
900	**820116**	Shaft-Gear
1044	**820080**	Screw (Flywheel)
1072	**820081**	Screw (Idle Gear Plate)
1073	**820117**	Plate-Idle Gear
1075	**820236**	Pulley-Crankshaft
1242	**825739**	Bearing Set/STD-Rod
1243	**825740**	Bearing Set/010-Rod
1355	**821291**	Bearing Set/STD-Main
1356	**821293**	Bearing Set/010-Main

Not For Reproduction

Copyright © Briggs and Stratton. All Rights reserved

Piston, Crankshaft, Flywheel

REF NO	PART NO	QTY	DESCRIPTION
16	825494		CRANKSHAFT
23	825303		FLYWHEEL
25	825796		PISTON ASSEMBLY -(Standard)
25	825801		PISTON ASSEMBLY -(.010 Oversize)
26	825512		SET, Ring -(Standard)
26	825514		SET, Ring -(.010 Oversize)
27	820926		LOCK, Piston Pin
29	825736		ROD, Connecting
32	820928		SCREW -(Connecting Rod)
598	821297		SHIM, End Play -(Crankshaft or Camshaft Bearing) (.005 Oversize)
598	821295		SHIM, End Play -(Crankshaft or Camshaft Bearing) (Standard)
653	820079		SCREW -(Crankshaft Pulley)
718C	820059		PIN, Locating
746	820611		GEAR, Idler
900	820116		SHAFT, Gear
1044	820080		SCREW -(Flywheel)
1072	820081		SCREW -(Idle Gear Plate)
1073	820117		PLATE, Idle Gear
1075	820236		PULLEY, Crankshaft
1242	825739		SET, Rod Bearing, Standard
1243	825740		SET, Rod Bearing, 010
1355	821291		SET, Main Bearing, Standard
1356	821293		SET, Main Bearing, 010

Not For Reproduction

Copyright © Briggs and Stratton. All Rights reserved

Radiator, Radiator Hoses, Reserve Tank

Mfg. No: 58A447-0305-E2

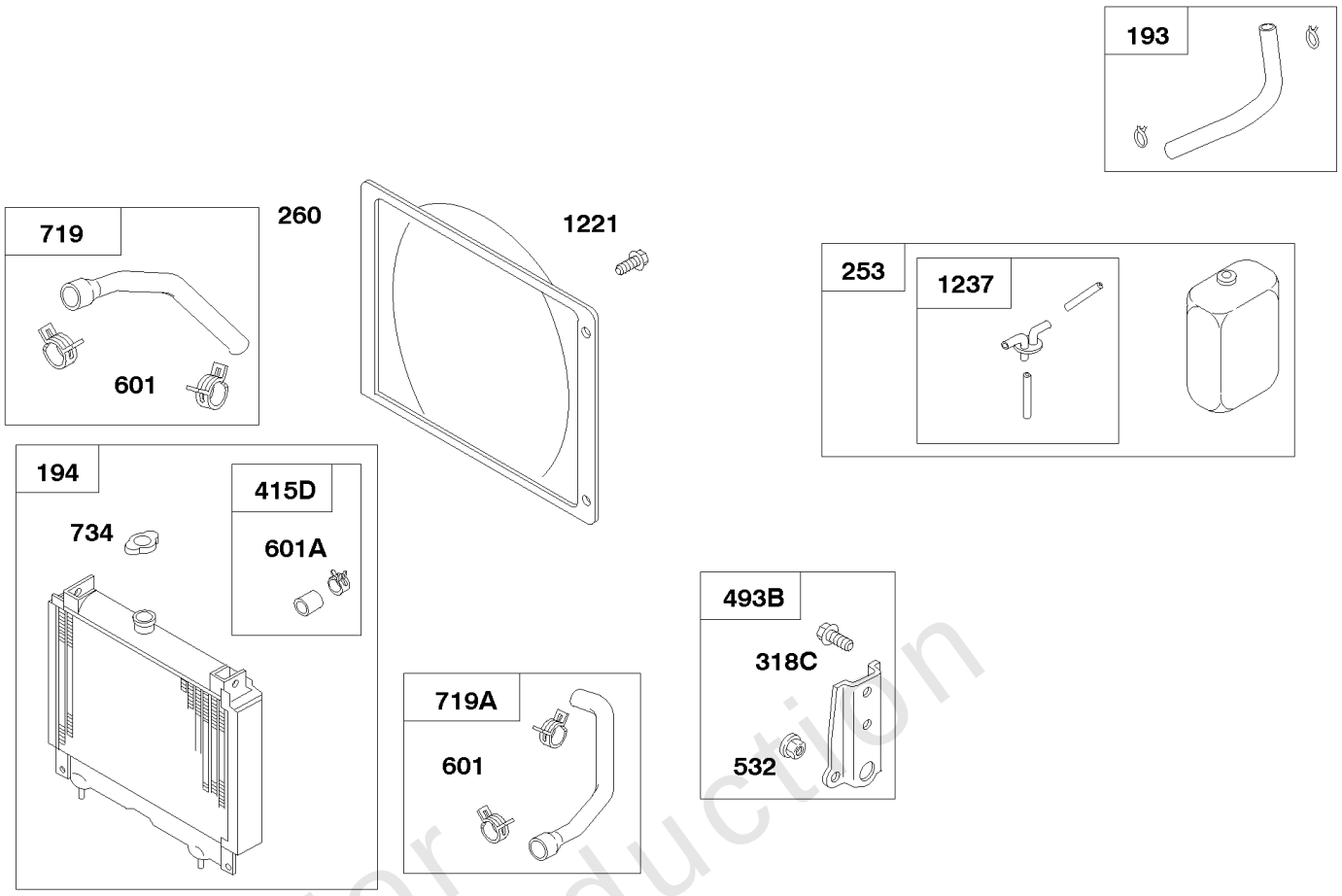

REF. NO.	PART NO.	DESCRIPTION
193	**825697**	Hose-Reserve Tank
194	**825645**	Radiator Used on Type No(s). 0201, 0231, 0234.
253	**825462**	Tank-Reserve
260	**821019**	Shroud-Fan (375mm) Used on Type No(s). 0201, 0234.
318C	**821233**	Screw (Mounting Bracket)
415D	**825075**	Plug (Radiator)
493B	**825106**	Bracket-Mounting (Reserve Tank)
532	**820011**	Nut (Mounting Bracket)
532A	**820070**	Nut (Mounting Bracket)
601	**820256**	Clamp-Hose
601A	**820201**	Clamp-Hose
719	**825557**	Hose-Radiator Used on Type No(s). 0201, 0234. **------- Note -----** **825134** Hose-Radiator Used on Type No(s). 0210.
719A	**825671**	Hose-Radiator Used on Type No(s). 0201, 0234. **------- Note -----** **825133** Hose-Radiator Used on Type No(s). 0210.
734	**820258**	Cap-Radiator
1221	**820636**	Screw (Fan Shroud) Used on Type No(s). 0201, 0234.
1237	**825461**	Cap/Hose-Reserve

Not For Reproduction

Copyright © Briggs and Stratton. All Rights reserved

Radiator, Radiator Hoses, Reserve Tank

REF NO	PART NO	QTY	DESCRIPTION
193	825697		HOSE, Reserve Tank
253	825462		TANK, Reserve
318C	821233		SCREW -(Mounting Bracket)
415D	825075		PLUG -(Radiator)
493B	825106		BRACKET, Mounting -(Reserve Tank)
532	820011		NUT -(Mounting Bracket)
601	820256		CLAMP, Hose
601A	820201		CLAMP, Hose
734	820258		CAP, Radiator
1237	825461		CAP, Reserve Tank

Not For\nReproduction

REF NO	PART NO	QTY	DESCRIPTION

Not For\nReproduction

Copyright © Briggs and Stratton. All Rights reserved

Rocker Arm Shaft, Camshaft, Cam Gear

Mfg. No: 58A447-0305-E2

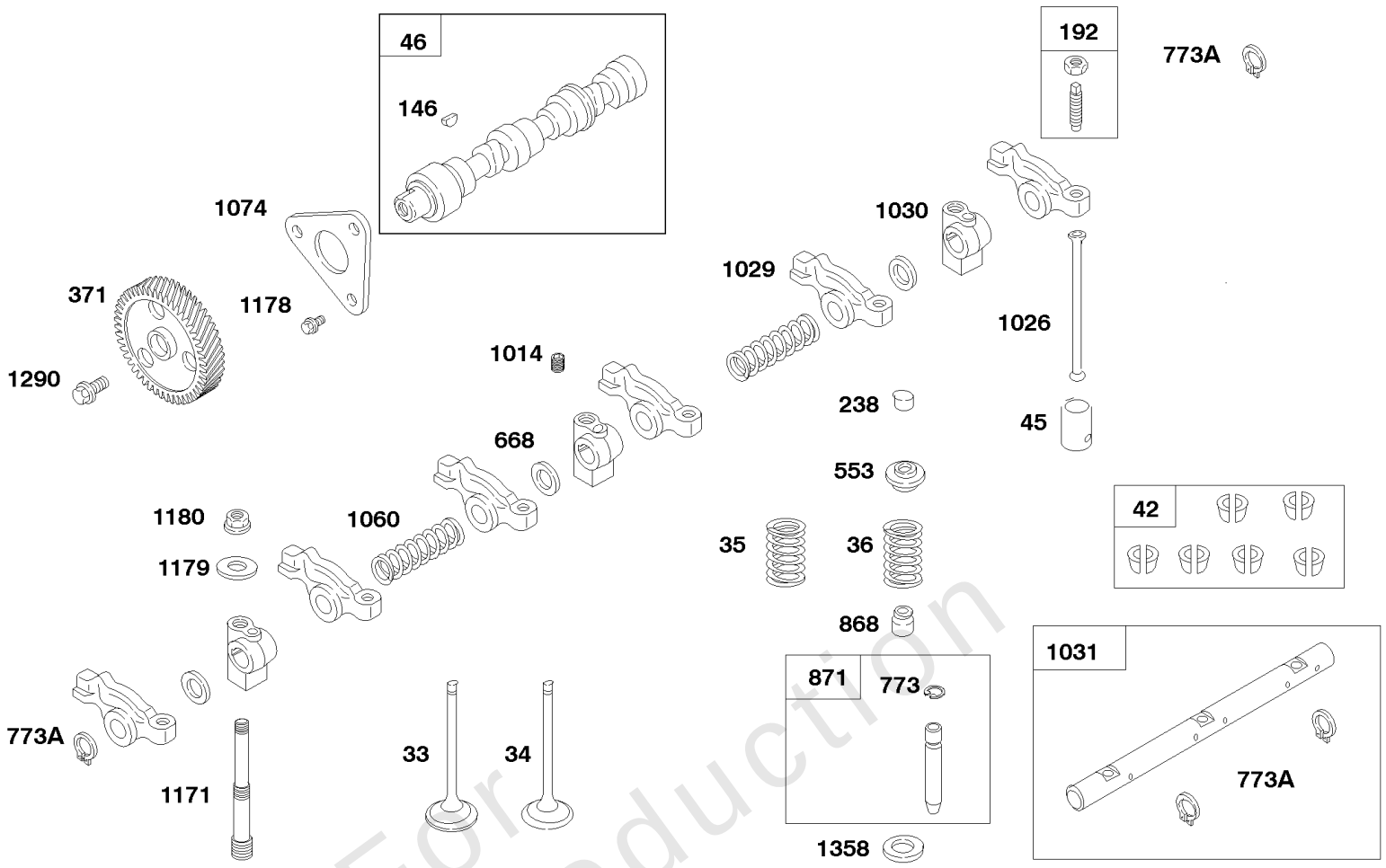

REF. NO.	PART NO.	DESCRIPTION
33	820404	Valve-Exhaust
34	820403	Valve-Intake
35	820406	Spring-Valve (Intake)
36	820406	Spring-Valve (Exhaust)
42	825082	Keeper-Valve (Contains 6 Sets)
45	820110	Tappet-Valve
46	820936	Camshaft
146	691639	Key-Timing
192	825688	Adjuster-Rocker Arm (Used After Code Date 04083100). **------- Note -----** **825041** Adjuster-Rocker Arm (Used Before Code Date 04090100).
238	821214	Cap-Valve (Used After Code Date 04083100). **------- Note -----** **820113** Cap-Valve (Used Before Code
371	820613	Gear-Cam
553	820111	Retainer-Valve Spring
668	820065	Spacer (Rocker Arm Shaft) (Includes 3)
773	820130	Retainer (Valve Guide Bushing)
773A	820003	Retainer (Rocker Arm Shaft)
868	820405	Seal-Valve
871	825030	Bushing-Valve Guide
1014	820105	Screw (Rocker Arm Support)
1026	821218	Rod-Push (Used After Code Date 04083100). **------- Note -----** **820109** Rod-Push (Used Before Code Date 04090100).
1029	820387	Arm-Rocker
1030	820106	Support-Rocker Arm
1031	825093	Shaft-Rocker Arm
1060	820044	Spring-Rocker Shaft
1074	820118	Retainer-Camshaft
1171	820076	Stud (Rocker Cover)
1178	820032	Screw (Camshaft Retainer)
1179	820177	Washer (Rocker Arm Support)
1180	820070	Nut (Rocker Arm Support)
1290	820075	Screw (Cam Gear)
1358	820112	Seat-Valve Spring

Not For Reproduction

Copyright © Briggs and Stratton. All Rights reserved

Rocker Arm Shaft, Camshaft, Cam Gear

REF NO	PART NO	QTY	DESCRIPTION
33	820404		VALVE, Exhaust
34	820403		VALVE, Intake
35	820406		SPRING, Valve -(Intake)
36	820406		SPRING, Valve -(Exhaust)
42	825082		KEEPER, Valve -(Contains 6 Sets)
45	820110		TAPPET, Valve
46	820936		CAMSHAFT
146	691639		KEY, Timing
192	825688		ADJUSTER. Rocker Arm -Used After Code Date 04083100
192	825041		ADJUSTER. Rocker Arm -Used Before Code Date 04090100
238	821214		CAP, Valve -Used After Code Date 04083100
238	820113		CAP, Valve -Used Before Code Date 04090100
371	820613		GEAR, Cam
553	820111		RETAINER, Valve
668	820065		SPACER -(Rocker Arm Shaft) (Includes 3)
773	820130		RETAINER -(Valve Guide Bushing)
773A	820003		RETAINER -(Rocker Arm Shaft)
868	820405		SEAL, Valve
871	825030		BUSHING, Valve Guide
1014	820105		SCREW -(Rocker Arm Support)
1026	820422		ROD, Push -Used Before Code Date 04090100
1026	821218		ROD, Push -Used After Code Date 04083100
1029	820387		ARM, Rocker
1030	820106		SUPPORT, Rocker Arm
1031	825093		SHAFT, Rocker Arm
1060	820044		SPRING, Rocker Shaft
1074	820118		RETAINER, Camshaft
1171	820076		STUD -(Rocker Cover)
1178	820032		SCREW -(Camshaft Retainer)
1179	820177		WASHER -(Rocker Arm Support)
1180	820070		NUT -(Rocker Arm Support)
1290	820075		SCREW -(Cam Gear)
1358	820112		SEAT, Valve Spring

Not For Reproduction

Copyright © Briggs and Stratton. All Rights reserved

Timing Gear Cover, Coil Trigger

Mfg. No: 58A447-0305-E2

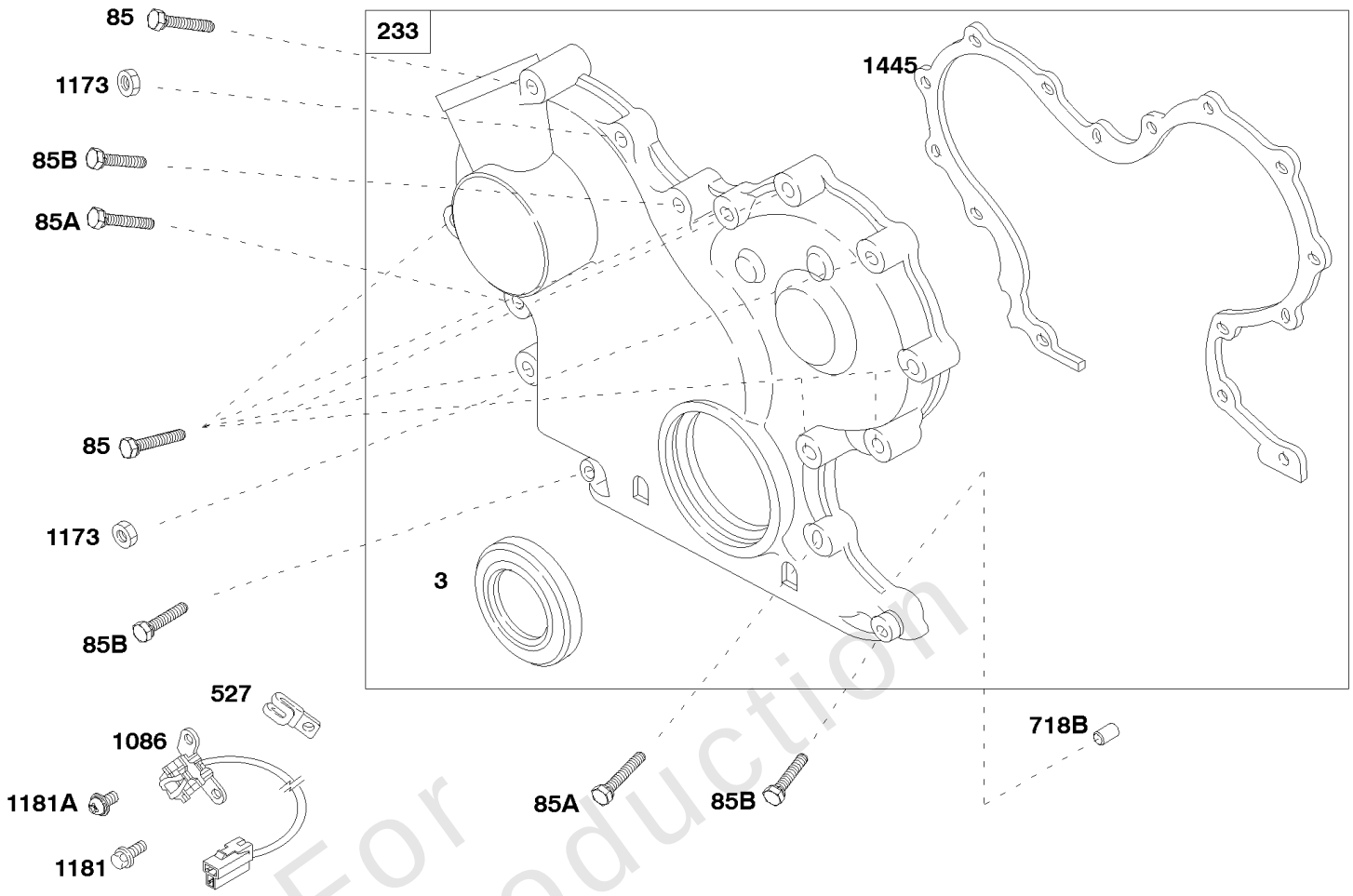

REF. NO.	PART NO.	DESCRIPTION
3	821326	Seal-Oil (Magneto Side)
85	820425	Screw (Timing Gear Cover to Gear Housing)
85A	820029	Screw (Timing Gear Cover to Gear Housing)
85B	820027	Screw (Timing Gear Cover to Gear Housing)
233	825758	Cover-Timing Gear
527	820047	Clamp-Tube
718B	820061	Pin_Locating
1086	825009	Trigger-Coil
1173	820069	Nut (Timing Gear Cover)
1181	820029	Screw (Coil Trigger)
1181A	820013	Screw (Coil Trigger)
1445	820377	Gasket-Timing Gear Cover

Not For Reproduction

Copyright © Briggs and Stratton. All Rights reserved

Timing Gear Cover, Coil Trigger

REF NO	PART NO	QTY	DESCRIPTION
3	821326		SEAL, Oil -(Magneto Side)
85	820425		SCREW -(Gear Cover)
85A	820029		SCREW -(Gear Cover)
85B	820027		SCREW -(Gear Cover)
233	825758		COVER, Timing Gear
527	820047		CLAMP, Hose
718B	820061		PIN, Locating
1086	825009		TRIGGER, Ignition
1173	820069		NUT -(Gear Cover)
1181	820029		SCREW -(Ignition Trigger)
1181A	820013		SCREW -(Ignition Trigger)
1445	820377		GASKET, Gear Cover/Housing

Not For\nReproduction

Copyright © Briggs and Stratton. All Rights reserved

Turbo Charger, Intake Manifold, Exhaust Manifold

Mfg. No: 58A447-0305-E2

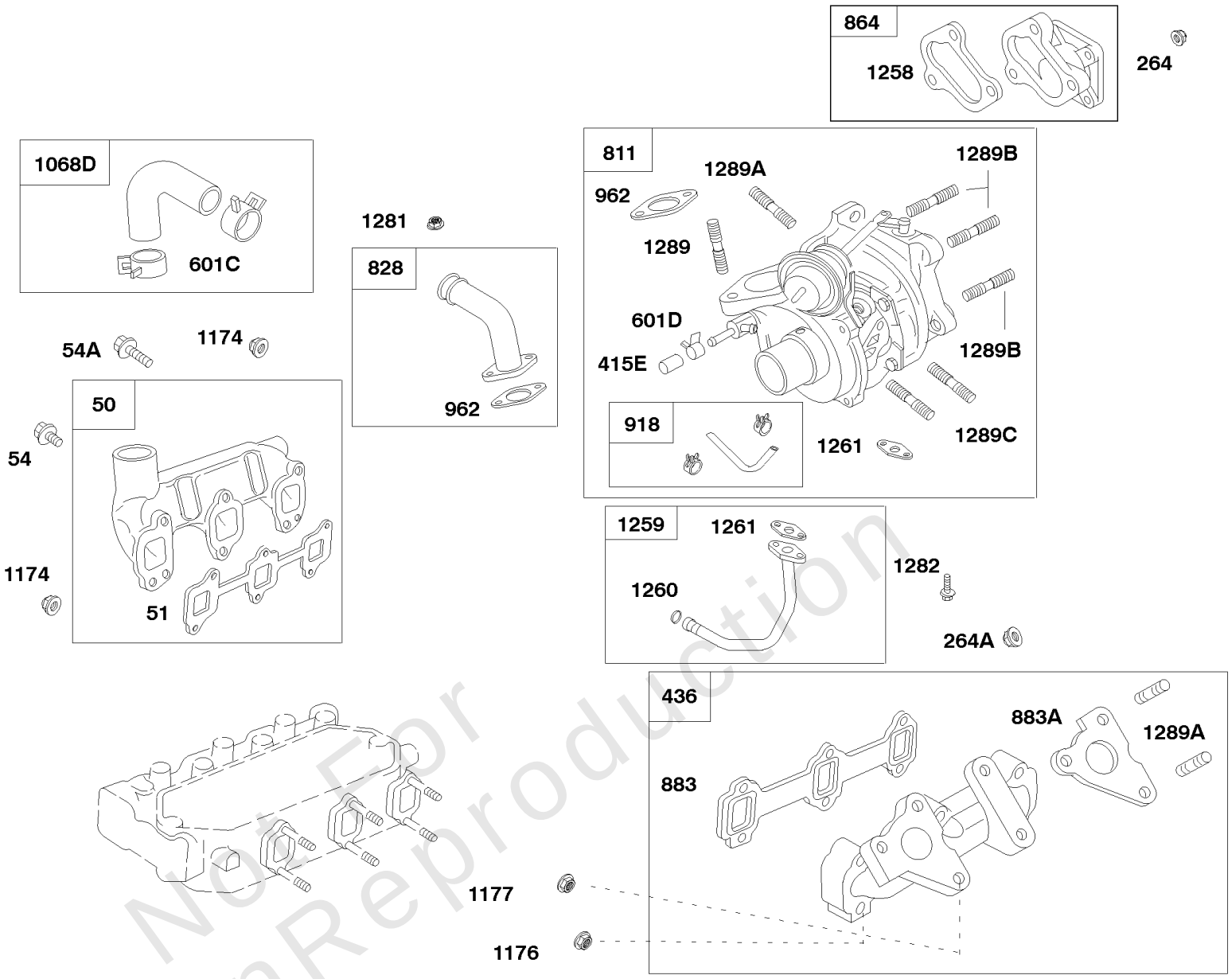

Not For Reproduction

REF. NO.	PART NO.	DESCRIPTION
50	**825530**	Manifold-Intake
51	**820407**	Gasket-Intake
54	**820031**	Screw (Intake Manifold)
54A	**820408**	Screw (Intake Manifold)
264	**820969**	Nut (Muffler Adapter)
264A	**820178**	Nut (Muffler Adapter)
415E	**820995**	Plug (Turbo Charger)
436	**825531**	Manifold-Exhaust
601C	**820944**	Clamp-Hose
601D	**820993**	Clamp-Hose
811	**825533**	Charger-Turbo
823	**821249**	Screw (Muffler Adapter)
828	**825536**	Pipe-Air Inlet
864	**825537**	Adapter-Muffler
883	**820817**	Gasket-Exhaust (Manifold)
883A	**820967**	Gasket-Exhaust (Turbo Charger)
918	**825542**	Hose-Vacuum
962	**820988**	Gasket-Air Inlet Pipe
1068D	**825543**	Hose/Clamp Assembly
1174	**820069**	Nut (Intake Manifold)
1176	**820178**	Nut (Exhaust Manifold)
1177	**820178**	Nut
1258	**820990**	Gasket- Muffler Adapter
1259	**825535**	Pipe-Oil Outlet
1260	**820975**	Seal-O Ring (Oil Outlet Pipe)
1261	**820973**	Gasket-Oil Outlet
1281	**820181**	Nut (Air Inlet Pipe)
1282	**820971**	Screw (Oil Outlet Pipe)
1289	**820981**	Stud (Turbo Charger)
1289A	**820553**	Stud (Turbo Charger)
1289B	**820983**	Stud (Turbo Charger)

Copyright © Briggs and Stratton. All Rights reserved

Turbo Charger, Intake Manifold, Exhaust Manifold

REF NO	PART NO	QTY	DESCRIPTION
50	825530		MANIFOLD, Intake
51	820407		GASKET, Intake
54	820031		SCREW -(Intake Manifold)
54A	820408		SCREW -(Intake Manifold)
264	820969		NUT -(Muffler Adapter)
264A	820178		NUT -(Muffler Adapter)
415E	820995		PLUG -(Turbo Charger)
436	825531		MANIFOLD, Exhaust
601C	820944		CLAMP, Hose
601D	820993		CLAMP, Hose
811	825533		CHARGER, Turbo
828	825536		PIPE, Air Inlet
864	825537		ADAPTER, Muffler
883	820817		GASKET, Exhaust -(Manifold)
883A	820967		GASKET, Exhaust -(Turbo Charger)
918	825542		HOSE, Vacuum
962	820988		GASKET, Air Inlet Pipe
1068D	825543		HOSE/CLAMP ASSEMBLY
1174	820069		NUT -(Intake Manifold)
1176	820178		NUT -(Exhaust Manifold)
1177	820178		NUT -(Muffler)
1258	820990		GASKET, Muffler Adapter
1259	825535		PIPE, Oil Outlet
1260	820975		SEAL, O-Ring -(Oil Outlet Pipe)
1261	820973		GASKET, Oil Outlet
1281	820181		NUT -(Air Inlet Pipe)
1282	820971		SCREW -(Oil Outlet Pipe)
1289	820981		STUD -(Turbo Charger)
1289A	820553		STUD -(Turbo Charger)
1289B	820983		STUD -(Turbo Charger)
1289C	820985		STUD -(Turbo Charger)

Not For Reproduction

Copyright © Briggs and Stratton. All Rights reserved

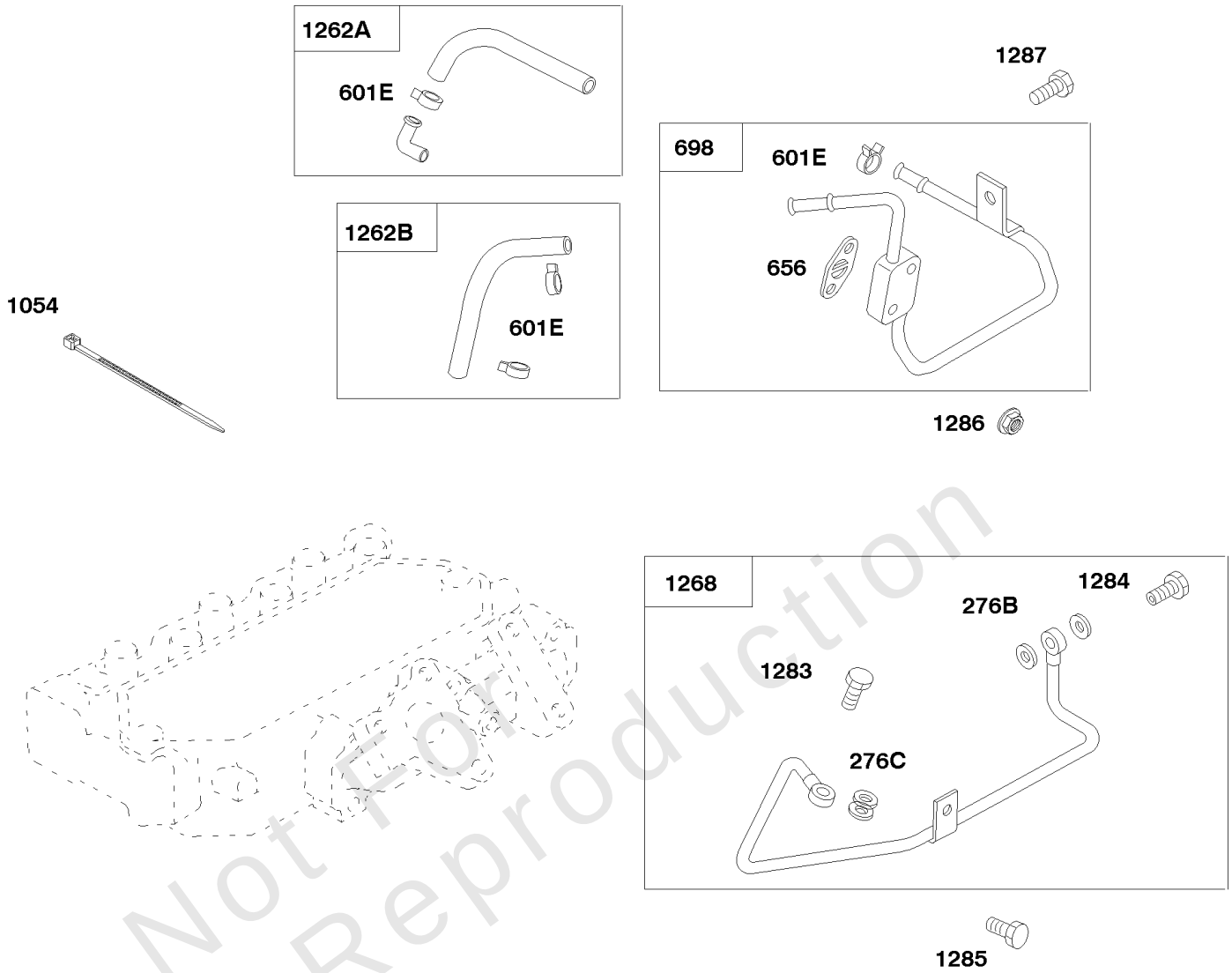

Not For InRepro duction

REF. NO.	PART NO.	DESCRIPTION
276B	**820950**	Washer-Sealing (Oil Inlet Pipe)
276C	**820952**	Washer-Sealing (Oil Inlet Pipe)
601E	**820960**	Clamp-Hose
656	**820962**	Gasket-Water Pipe
698	**825558**	Pipe-Water
1054	**280275**	Tie-Cable
1262A	**825540**	Line-Water
1262B	**825541**	Line-Water
1268	**825539**	Pipe-Oil Inlet
1283	**820954**	Screw (Oil Inlet Pipe)
1284	**820948**	Screw (Oil Inlet Pipe)
1285	**820023**	Screw (Oil Inlet Pipe)
1286	**820069**	Nut (Water Pipe)
1287	**820023**	Screw (Water Pipe)

Copyright © Briggs and Stratton. All Rights reserved

Water Pipe, Water Lines

REF NO	PART NO	QTY	DESCRIPTION
276B	820950		WASHER, Sealing -(Oil Inlet Pipe)
276C	820952		WASHER, Sealing -(Oil Inlet Pipe)
601E	820960		CLAMP, Hose
656	820962		GASKET, Water Pipe
698	825558		PIPE, Water
1054	280275		TIE, Cable
1262A	825540		LINE, Water
1262B	825541		LINE, Water
1268	825539		PIPE, Oil Inlet
1283	820954		SCREW -(Oil Inlet Pipe)
1284	820948		SCREW -(Oil Inlet Pipe)
1285	820023		SCREW -(Oil Inlet Pipe)
1286	820069		NUT -(Water Pipe)
1287	820023		SCREW -(Water Pipe)

Not For Reproduction

Water Pump, Radiator Fan, Fan Belt

Mfg. No: 58A447-0305-E2

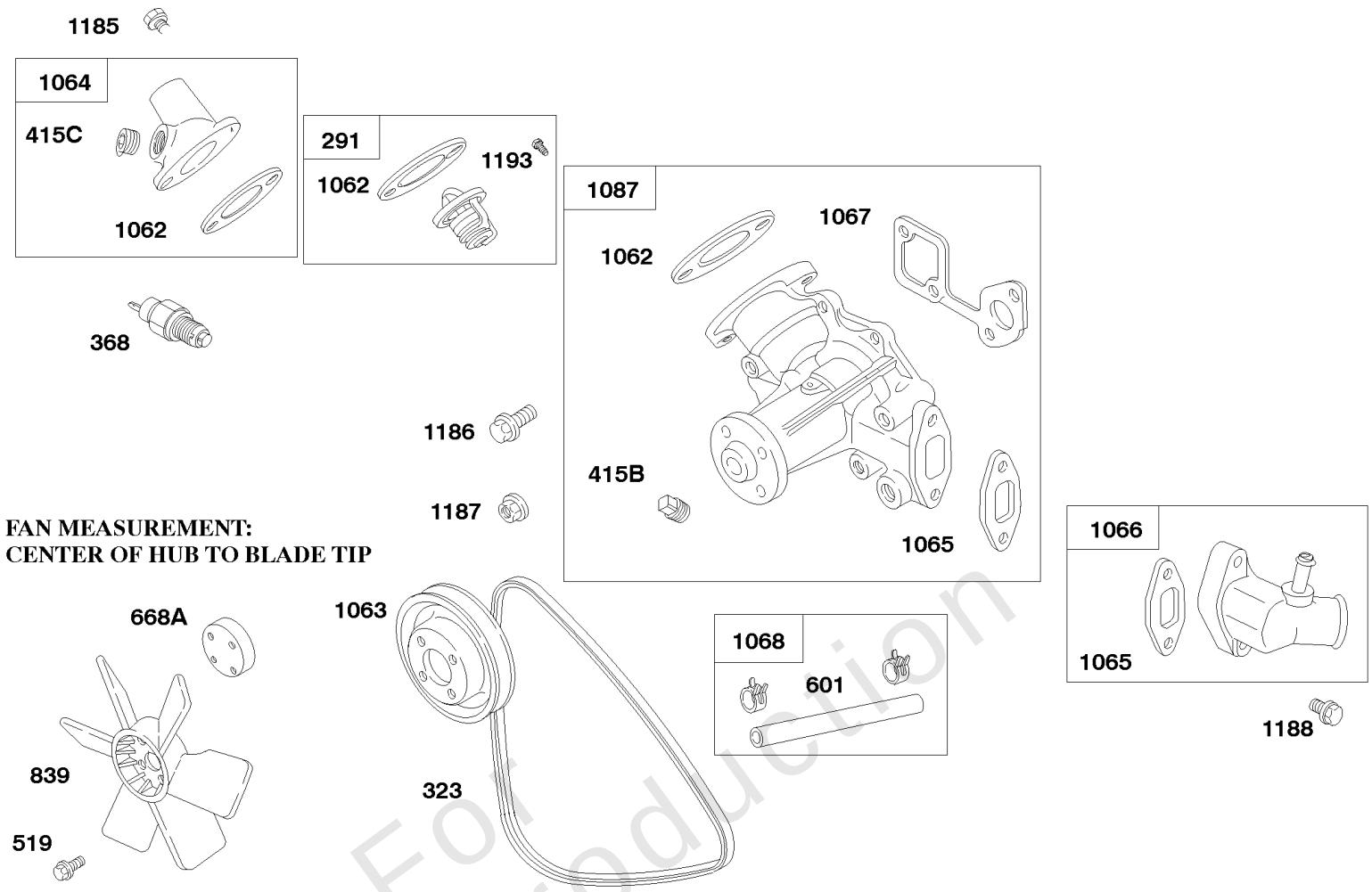

REF. NO.	PART NO.	DESCRIPTION
291	**825064**	Thermostat
323	**821075**	Belt-Vee (940mm)
368	**820208**	Switch-Water Temperature
415B	**820182**	Plug (Water Pump)
415C	**820052**	Plug (Outlet Housing)
519	**820030**	Screw (Radiator Fan) Used on Type No(s). 0201, 0209, 0210, 0301, 0309, 0310, 0376 0476. **------- Note -----** **821233** Screw (Radiator Fan) Used on Type No(s). 0205, 0225, 0231, 0234, 0305, 0334, 0335, 0381, 0481.
668A	**820218**	Spacer (Radiator Fan) (15mm) **------- Note -----** **820841** Spacer (Radiator Fan) (10mm)
839	**825446**	Fan-Radiator (350mm) Used on Type No(s). 0210, 0310, 0335, 0376, 0476. **------- Note -----** **821013** Fan-Radiator (340mm) Used on Type No(s). 0205, 0225, 0231, 0234, 0305, 0325, 0334, 0381,0481. **825644** Fan-Radiator (360mm) Used on Type No(s). 0201, 0209, 0301,
1062	**820093**	Gasket-Outlet Housing
1063	**820095**	Pulley-Pump
1064	**825519**	Housing-Outlet
1065	**820098**	Gasket-Inlet Housing
1066	**825520**	Housing-Inlet
1067	**820100**	Gasket-Water Pump
1068	**825045**	Hose/Clamp Assembly
1087	**825639**	Pump-Water
1185	**820031**	Screw (Outlet Housing)
1186	**820022**	Screw (Water Pump)
1187	**820181**	Nut (Water Pump)
1188	**820031**	Screw (Inlet Housing)
1193	**820185**	Screw (Thermostat)

Not For Reproduction

Copyright © Briggs and Stratton. All Rights reserved

Water Pump, Radiator Fan, Fan Belt

REF NO	PART NO	QTY	DESCRIPTION
291	825064		THERMOSTAT
323	821075		BELT, Vee -(940mm)
368	820208		SWITCH, Water Temperature
415B	820182		PLUG
415C	820052		PLUG -(Outlet Housing)
519	820030		SCREW -(Radiator Fan)
601	820256		CLAMP, Hose
668A	820218		SPACER -(15mm)
839	821013		FAN, Radiator -(375mm Fan)
1062	820093		GASKET, Outlet Housing
1063	820095		PULLEY, Pump
1064	825519		HOUSING, Outlet
1065	820098		GASKET, Inlet Housing
1066	825520		HOUSING, Inlet
1067	820100		GASKET, Water Pump
1068	825045		HOSE/CLAMP ASSEMBLY
1087	825639		PUMP, Water
1185	820031		SCREW -(Outlet Housing)
1186	820022		SCREW -(Water Pump)
1187	820181		NUT -(Water Pump)
1188	820031		SCREW -(Inlet Housing)
1193	820185		SCREW -(Thermostat)

Not For Reproduction

Copyright © Briggs and Stratton. All Rights reserved

VANGUARD®

COMMERCIAL POWER

BRIGGS & STRATTON®

Copyright © Briggs and Stratton. All Rights reserved